HEATHKIT® MANUAL

ASSEMBLY

Model HM-102
RF POWER METER

595-1272-06

HEATH COMPANY • BENTON HARBOR, MICHIGAN

HEATH COMPANY PHONE DIRECTORY

The following telephone numbers are direct lines to the departments listed:

Kit orders and delivery information	(616) 982-3411
Credit	(616) 982-3561
Replacement Parts	(616) 982-3571

Technical Assistance Phone Numbers
8:00 A.M. to 12 P.M. and 1:00 P.M. to 4:30 P.M., EST, Weekdays Only

R/C, Audio, and Electronic Organs	(616) 982-3310
Amateur Radio	(616) 982-3296
Test Equipment, Weather Instruments and Home Clocks	(616) 982-3315
Television	(616) 982-3307
Aircraft, Marine, Security, Scanners, Automotive, Appliances and General Products	(616) 982-3496
Computers	(616) 982-3309

YOUR HEATHKIT 90 DAY LIMITED WARRANTY

If you are not satisfied with our service - warranty or otherwise - or with our products, write directly to our Director of Customer Services, Heath Company, Benton Harbor, Michigan 49022. He will make certain your problems receive immediate, personal attention.

Our attorney, who happens to be quite a kitbuilder himself, insists that we describe our warranty using all the necessary legal phrases in order to comply with the new warranty regulations. Fine. Here they are:

For a period of ninety (90) days after purchase, Heath Company will replace or repair free of charge any parts that are defective either in materials or workmanship. You can obtain parts directly from Heath Company by writing us at the address below or by telephoning us at (616) 982-3571. And we'll pay shipping charges to get those parts to you — anywhere in the world.

We warrant that during the first ninety (90) days after purchase, our products, when correctly assembled, calibrated, adjusted and used in accordance with our printed instructions, will meet published specifications.

If a defective part or error in design has caused your Heathkit product to malfunction during the warranty period through no fault of yours, we will service it free upon proof of purchase and delivery at your expense to the Heath factory, any Heathkit Electronic Center (units of Schlumberger Products Corporation), or any of our authorized overseas distributors.

You will receive free consultation on any problem you might encounter in the assembly or use of your Heathkit product. Just drop us a line or give us a call. Sorry, we cannot accept collect calls.

Our warranty does not cover and we are not responsible for damage caused by the use of corrosive solder, defective tools, incorrect assembly, misuse, fire, or by unauthorized modifications to or uses of our products for purposes other than as advertised. Our warranty does not include reimbursement for customer assembly or set-up time.

This warranty covers only Heathkit products and is not extended to allied equipment or components used in conjunction with our products. **We are not responsible for incidental or consequential damages.** Some states do not allow the exclusion or limitation of incidental or consequential damages, so the above limitation or exclusion may not apply to you. This warranty gives you specific legal rights, and you may also have other rights which vary from state to state.

HEATH COMPANY
BENTON HARBOR, MI. 49022

Prices and specifications subject to change without notice.

Assembly and Operation of the

HEATHKIT

RF POWER METER

MODEL HM-102

TABLE OF CONTENTS

Introduction 2

Parts List 2

Step-by-Step Assembly 4
- Circuit Board Assembly 4
- Remote Chassis Assembly 7
- Cabinet Assembly 10
- Cabinet Wiring 12

Calibration 13

Operation 16

In Case of Difficulty 18
- Troubleshooting Chart 19

Specifications 21

Circuit Description 22

Circuit Board X-Ray View 22

Remote Chassis Photo 23

Cabinet Photo 23

Schematic. . .(fold-out from Page) 23

Replacement Parts Price List 24

Warranty . . . . . Inside front cover

Customer Service . . . . . Inside rear cover

HEATH COMPANY
BENTON HARBOR, MICHIGAN 49022

Copyright ©1970
Heath Company
All rights reserved

INTRODUCTION

The Heathkit Model HM-102 RF Power Meter is a reliable instrument for measuring the RF power output and the SWR (VSWR) of an amateur radio station or other similar types of transmitting systems. The Power Meter can be permanently installed in the transmission line without affecting the transmitting and receiving capabilities of your station.

The Power Meter aids proper transmitter tuning as the meter indicates maximum forward power when the transmitter is tuned for maximum output. At the SWR setting, the meter measures the mismatch between the transmission line connected to the input terminal and the load connected to the output terminal. This information is of great value in making antenna adjustments and in determining the allowable frequency working range of the antenna.

This unit is designed for use only with a transmission line of 50 Ω nominal characteristic impedance. It has negligible insertion loss. The indicating meter is mounted in a small cabinet for use at the operating position. For convenience, the detector portion may be removed and positioned up to six feet away with the cable supplied. No external power is required.

PARTS LIST

Check each part against the following parts list. The key numbers correspond to the numbers in the Parts Pictorial (fold-out from Page 3). NOTE: When more than one number is on a package, disregard all but the part number as listed below.

To order a replacement part, use the Parts Order Form furnished with this kit. If a Parts Order Form is not available, refer to "Replacement Parts" inside the rear cover of the Manual.

KEY No.	PART No.	PARTS Per Kit	DESCRIPTION
RESISTORS			
1/2-Watt, 5%			
1	1-157	2	470 Ω (yellow-violet-brown)
	1-122	1	3300 Ω (orange-orange-red)
	1-58	1	22 kΩ (red-red-orange)
	1-159	1	82 kΩ (gray-red-orange)
	1-104	1	100 kΩ (brown-black-yellow)
Other Resistors			
2	1-16-1	1	68 Ω, 1-watt, 10% (blue-gray-black)
3	2-41	1	90 kΩ, 1/2-watt, precision

KEY No.	PART No.	PARTS Per Kit	DESCRIPTION
CAPACITORS			
4	20-148	2	100 pF mica
5	21-181	1	7.7 pF ceramic
	21-11	2	150 pF ceramic
	21-140	9	.001 μF ceramic
	21-27	2	.005 μF ceramic
6	31-57	1	2.7-20 pF trimmer
CONTROLS			
7	10-325	1	50 kΩ
8	19-153	1	200 kΩ with switch (appearance may vary)

KEY No.	PART No.	PARTS Per Kit	DESCRIPTION
INDUCTORS-DIODE-SWITCHES			
9	40-1011	1	Toroid coil
10	56-20	3	1N295 diode (red-white-green)
11	60-53	1	Slide switch
12	63-47	1	3-position rotary switch
HARDWARE			
#4 Hardware			
13	250-213	8	4-40 x 5/16" screw
14	252-15	8	4-40 nut
15	254-9	8	#4 lockwasher
#6 Hardware			
16	250-170	8	#6 x 1/4" sheet metal screw
	250-369	8	#6 x 1/4" black sheet metal screw
17	250-56	6	6-32 x 1/4" binder head screw
18	250-162	5	6-32 x 1/2" binder head screw
19	252-3	5	6-32 nut
20	253-89	1	D-washer
21	254-1	10	#6 lockwasher
22	259-1	1	#6 solder lug
Other Hardware			
23	250-43	2	8-32 x 1/4" setscrew
24	252-7	2	Control nut
25	253-10	2	Control flat washer
26	254-35	1	Control lockwasher
27	255-30	1	Control spacer
28	255-71	3	6-32 x 3/4" threaded spacer
29	257-12	1	Eyelet

KEY No.	PART No.	PARTS Per Kit	DESCRIPTION
METAL PARTS			
30	90-503-1	1	Cabinet top
31	90-504-1	1	Cabinet chassis
32	214-116	1	Remote chassis cover
33	214-115-2	1	Remote chassis
34	205-778	1	1/8" x 3/4" alignment tool blade
MISCELLANEOUS			
35	75-30	1	Strain relief
	75-93	1	1" square insulator paper
	85-1443-1	1	Circuit board
36	207-5	1	Cable clamp
37	261-9	4	Rubber foot
38	407-155	1	Meter
39	436-5	2	SO-239 connector
40	462-191	2	Knob
41	490-5	1	Nut starter
42	475-10	5	Ferrite bead
43	391-34	1	Blue and white label
	340-3	1	Bare wire
	346-21	1	Teflon* sleeving
	347-39	1	5-conductor cable
	597-260	1	Parts Order Form
	597-308	1	Kit Builders Guide
		1	Assembly Manual (See front cover for part number.)
			Solder

*DuPont Registered Trademark.

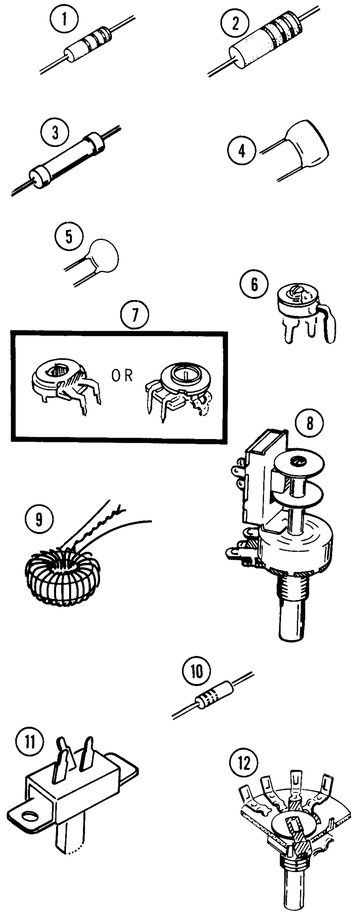

PARTS PICTORIAL

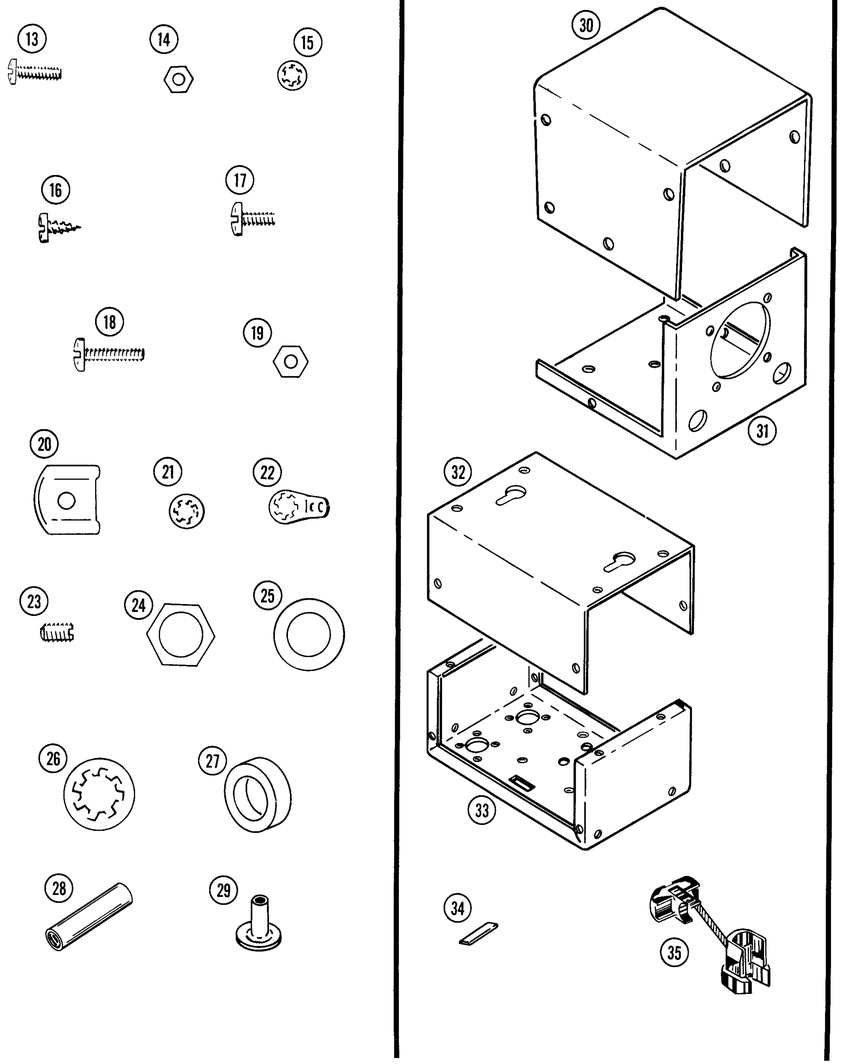

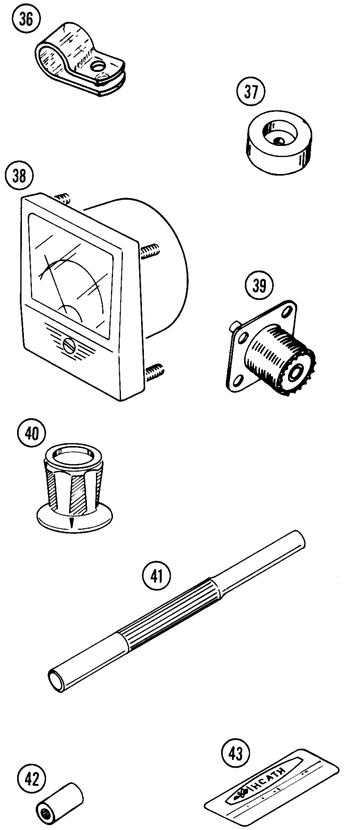

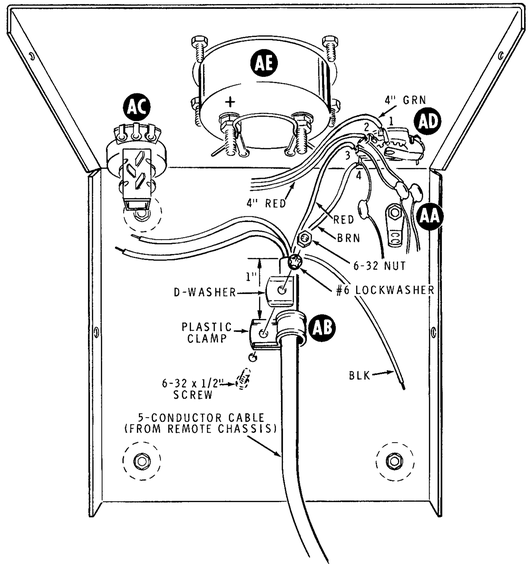

PICTORIAL 6

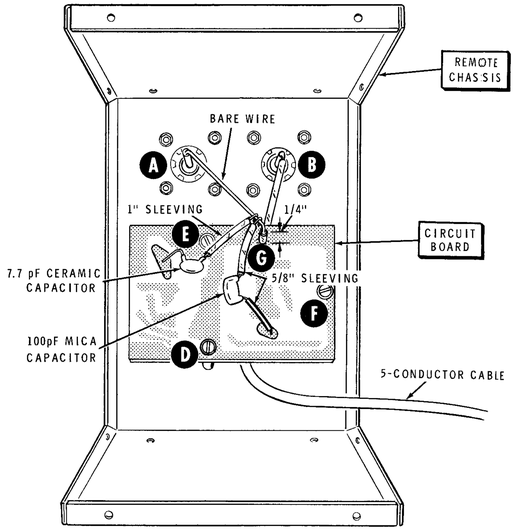

PICTORIAL 4

STEP-BY-STEP ASSEMBLY

Before you start the "Circuit Board Assembly," be sure to read the "Circuit Board Parts Mounting" and "Soldering" sections of the "Kit Builders Guide."

All resistors will be called out by resistance values (in Ω or kΩ); the color code will also be given for all except precision resistors. Capacitors will be called out by capacitance value (in pF or μF) and type (mica or ceramic).

CIRCUIT BOARD ASSEMBLY

Components will be installed on the circuit board by following the steps on Pages 4 through 6. Position all parts as shown in the Pictorials. Follow the instructions carefully and read the entire step before performing the operation.

Locate the circuit board and position it lettered side up as shown in Pictorial 1. Then complete each step on Pictorials 1 and 2.

START

FOR GOOD SOLDERED CONNECTIONS, YOU MUST KEEP THE SOLDERING IRON TIP CLEAN...
WIPE IT OFTEN WITH A DAMP SPONGE OR CLOTH.

( ) 90 kΩ precision resistor.

( ) .005 μF ceramic.

REMOVE INSULATION ON LEADS

( ) 100 pF mica.

NOTE: DIODES MAY BE SUPPLIED IN ANY OF THE FOLLOWING SHAPES. THE CATHODE END OF THE DIODE IS MARKED WITH A BAND OR BANDS. ALWAYS POSITION THIS END AS SHOWN IN THE PICTORIAL.

BAND OR BANDS

( ) 1N295 diode (red-white-green) at D1 (#56-20).

( ) .001 μF ceramic.

( ) 150 pF ceramic.

( ) 1N295 diode (red-white-green) at D2 (#56-20).

( ) 150 pF ceramic.

( ) 3300 Ω (orange-orange-red).

( ) .001 μF ceramic.

( ) 100 kΩ (brown-black-yellow).

( ) Solder the leads to the foil and cut off the excess lead lengths.

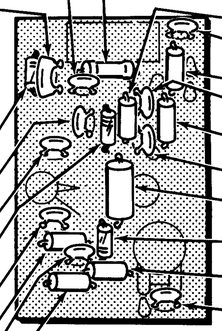

CONTINUE

( ) 470 Ω (yellow-violet-brown).

( ) .001 μF ceramic.

( ) 82 kΩ (gray-red-orange).

( ) .001 μF ceramic.

( ) 22 kΩ (red-red-orange).

( ) .001 μF ceramic.

( ) 68 Ω, 1-watt (blue-gray-black).

( ) 1N295 diode (red-white-green) at D3 (#56-20).

( ) 470 Ω (yellow-violet-brown).

( ) .001 μF ceramic.

( ) Solder the leads to the foil and cut off the excess lead lengths.

NOTE: Save one of the excess lead lengths for use in later steps.

PROCEED TO PICTORIAL 2.

PICTORIAL 1

START

( ) Install the toroid coil as follows:

1. Push an eyelet through the center of the toroid coil as shown, either side up. Then push the eyelet through the circuit board. Solder the eyelet to the foil.

2. Position the three toroid coil leads as shown, and push the leads through the circuit board. NOTE: Be sure the twisted pair of leads goes into the center hole. The lead coming from the top of the coil must go to the hole nearest D3, and the lead from the bottom must go to the hole nearest the slide switch outline.

3. Solder the three leads to the foil and remove any excess lead lengths.

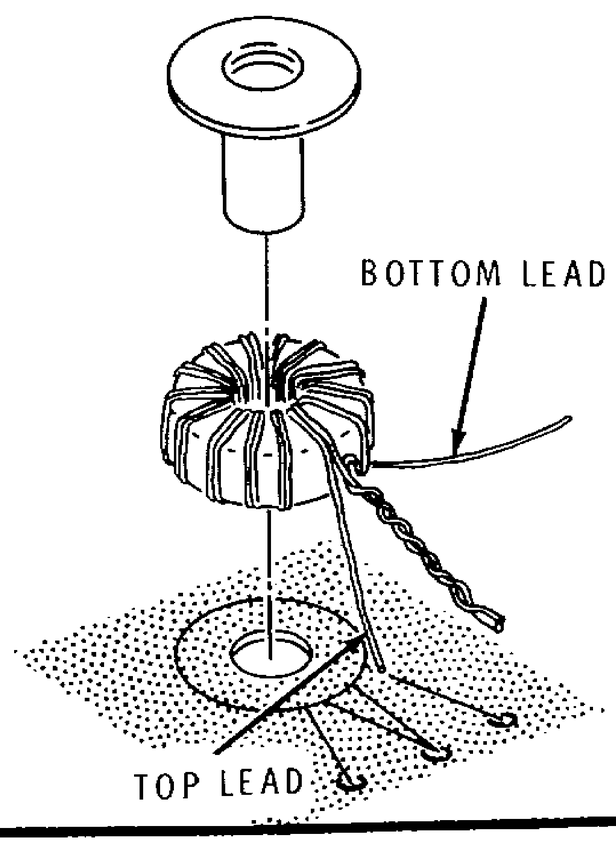

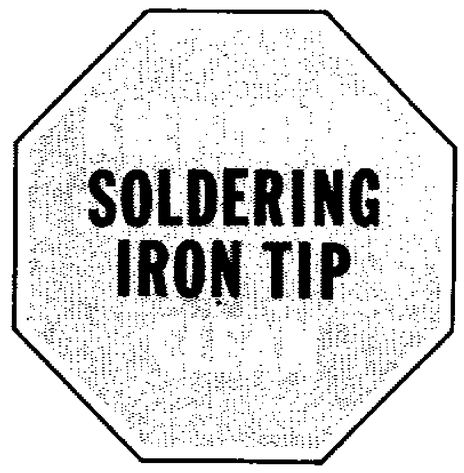

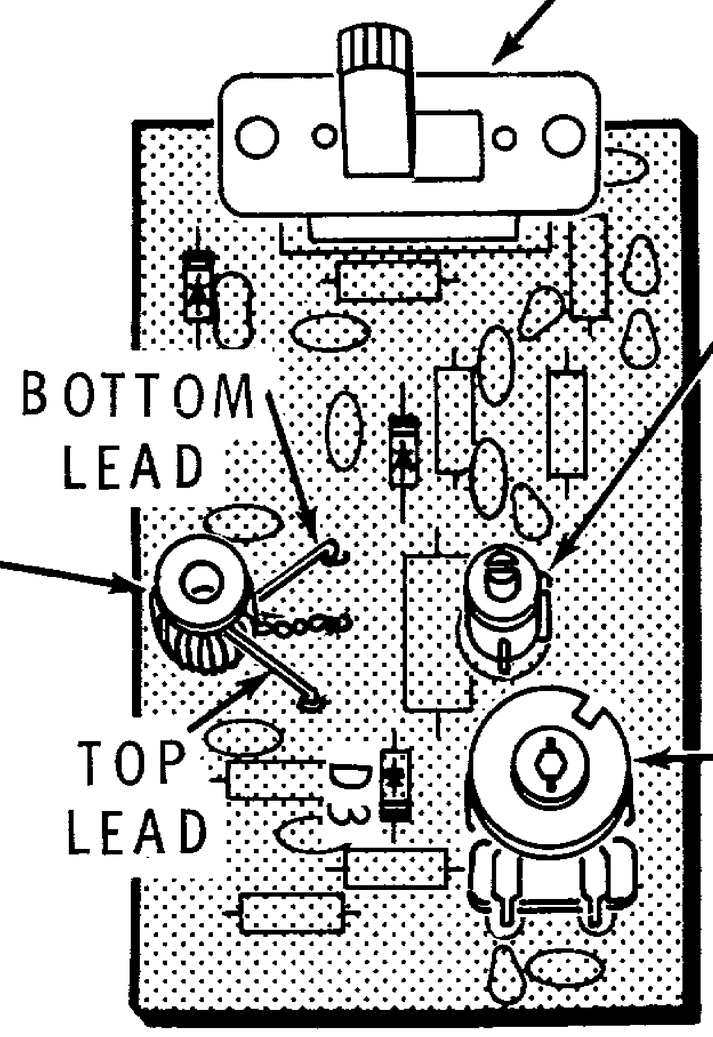

PICTORIAL 2

CONTINUE

( ) Install the 3-lug slide switch as shown. Press the switch firmly onto the surface of the circuit board, then solder the three lugs to the foil.

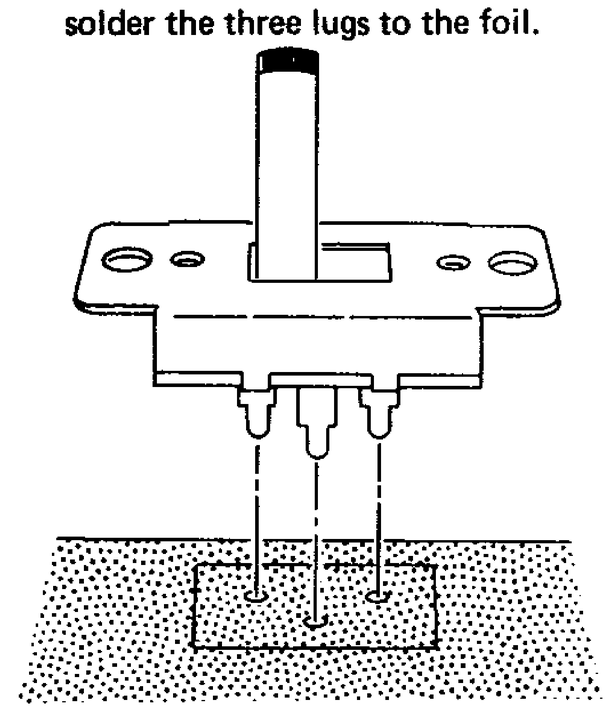

( ) Install the 2.7-20 pF trimmer as shown. Solder the three lugs to the foil.

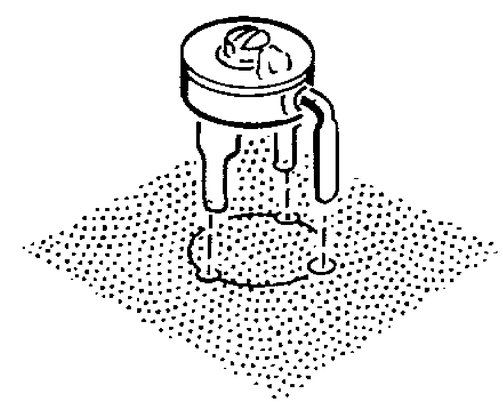

( ) Install the 50 kΩ control as shown. Solder the four lugs to the foil.

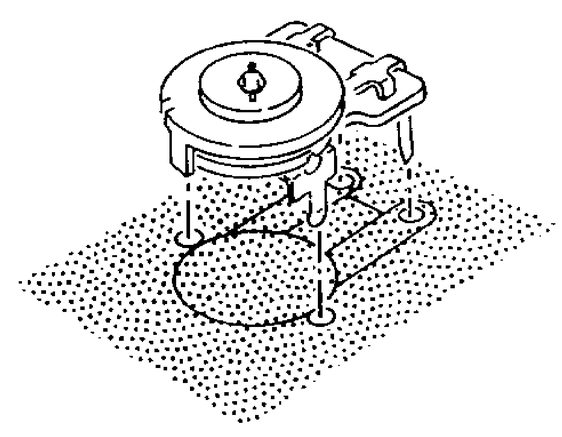

PROCEED TO PICTORIAL 3.

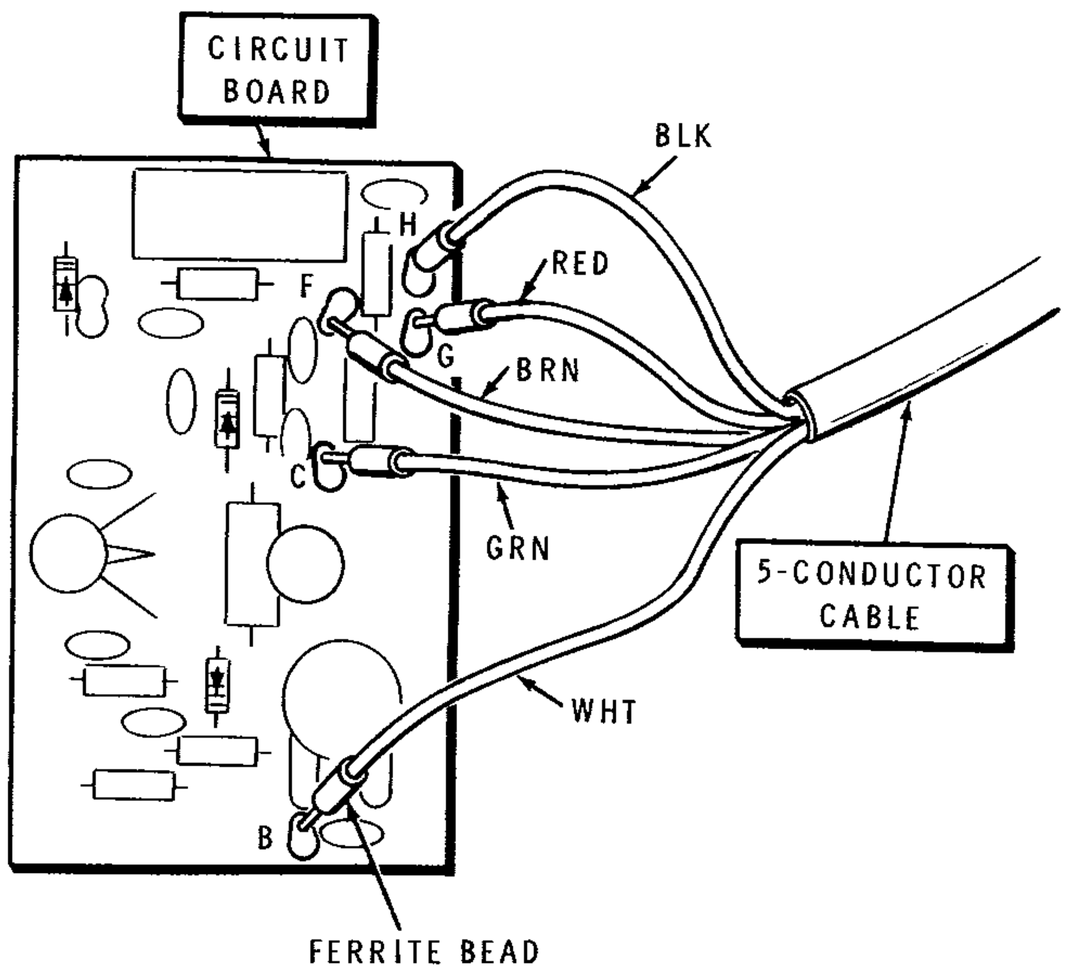

PICTORIAL 3

Refer to Pictorial 3 for the following steps.

( ) Locate the 5-conductor cable and cut 4" from one end of it. Save this short piece for use later.

( ) Refer to Detail 3A and prepare both ends of the long 5-conductor cable as shown. Twist the bare wire ends tightly and apply a small amount of solder to each to hold the small strands together.

NOTE: The 2" prepared end of the 5-conductor cable will be connected in the following steps.

( ) Refer to Detail 3B and place a ferrite bead over the end of the black wire. Then, push the end of the black wire through hole H until the ferrite bead is down against the component side of the circuit board. Solder the wire to the foil. Cut off any excess wire length on the foil side of the circuit board.

( ) In the same manner, install the white wire and bead combination at B (S-1).

( ) Install the red wire and bead combination at G (S-1).

( ) Install the green wire and bead combination at C (S-1).

( ) Install the brown wire and bead combination at F (S-1).

( ) Cut off the excess lead lengths on the foil side of the board.

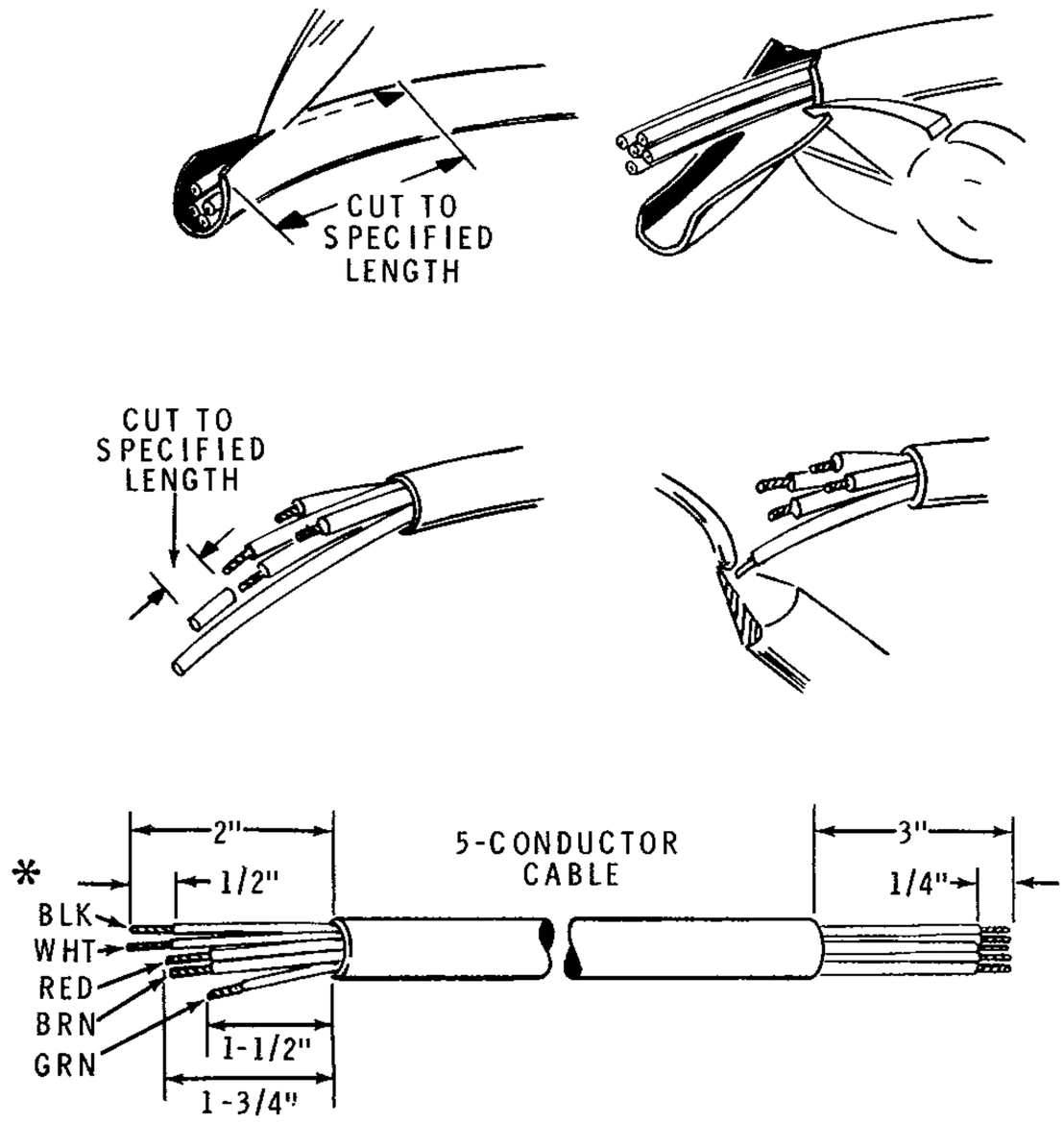

* NOTE: REMOVE 1/2" OF INSULATION FROM EACH WIRE ON THIS END.

Detail 3A

( ) Carefully inspect the foil side of the circuit board and be sure that all the connections are soldered and that there are no solder bridges between foils.

NOTE: Some of the circuit board holes will not be used.

Set the circuit board aside temporarily.

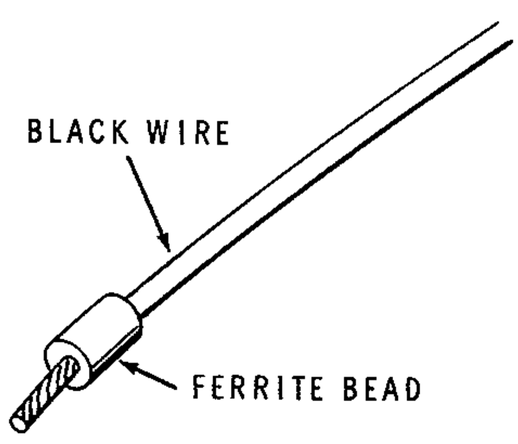

Detail 3B

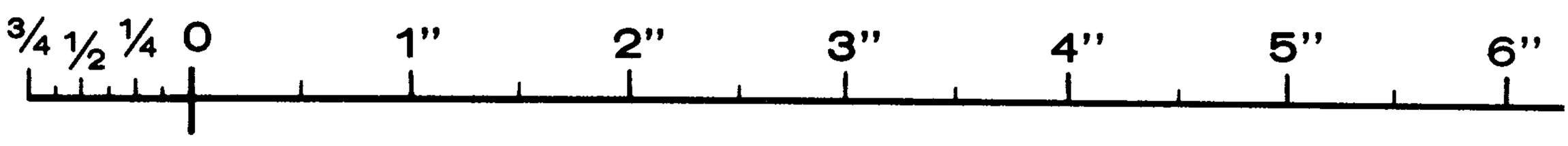

REMOTE CHASSIS ASSEMBLY

Refer to Pictorial 4 (fold-out from Page 4) for the following steps.

( ) Mount an SO-239 connector on the outside of the remote chassis at A with four 4-40 x 5/16" screws, four #4 lockwashers, and four 4-40 nuts as shown in Detail 4A.

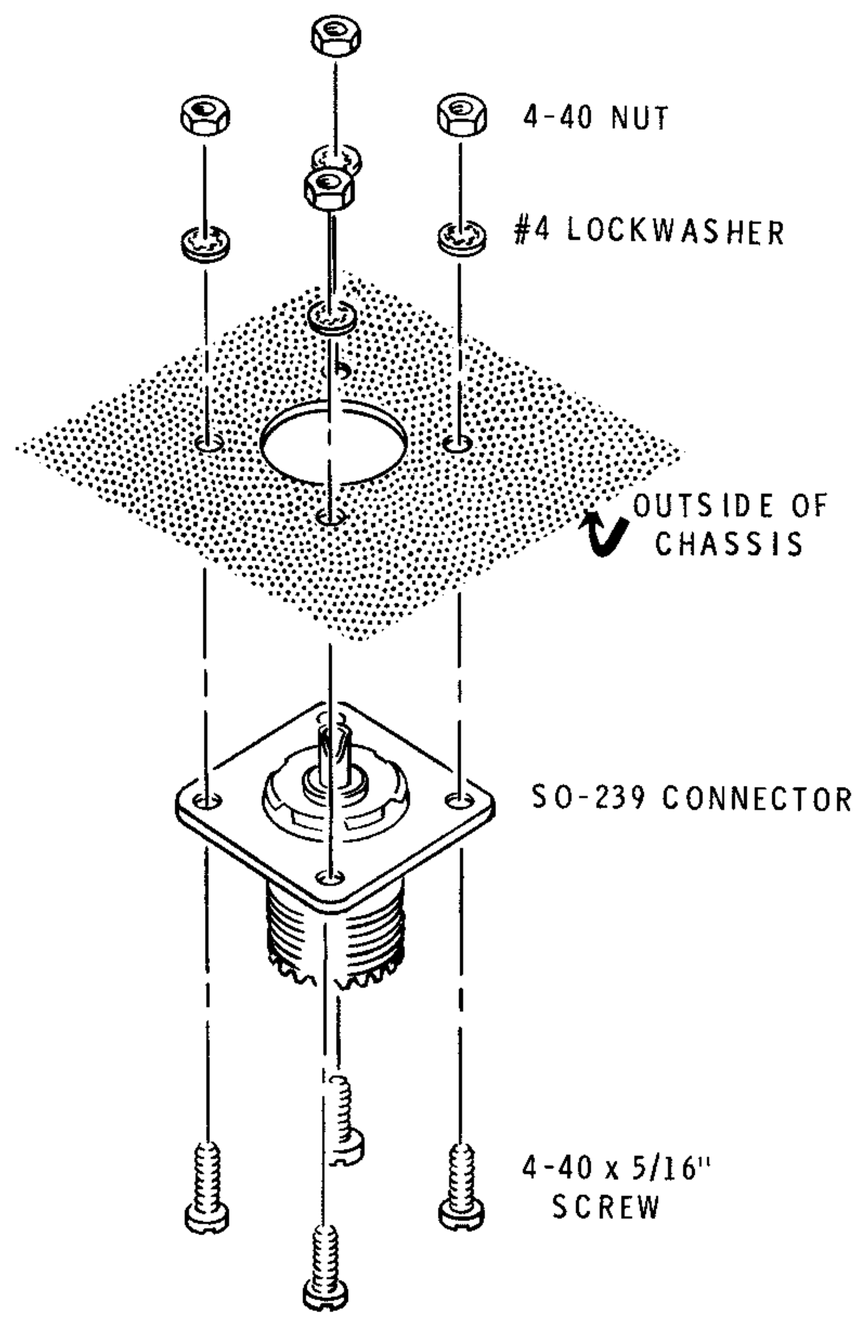

Detail 4A

( ) Mount the other SO-239 connector at B with four 4-40 x 5/16" screws, four #4 lockwashers, and four 4-40 nuts.

Refer to Detail 4B for the following steps.

( ) Solder a 4" length of bare wire to the center pin of connector B as shown in Detail 4B.

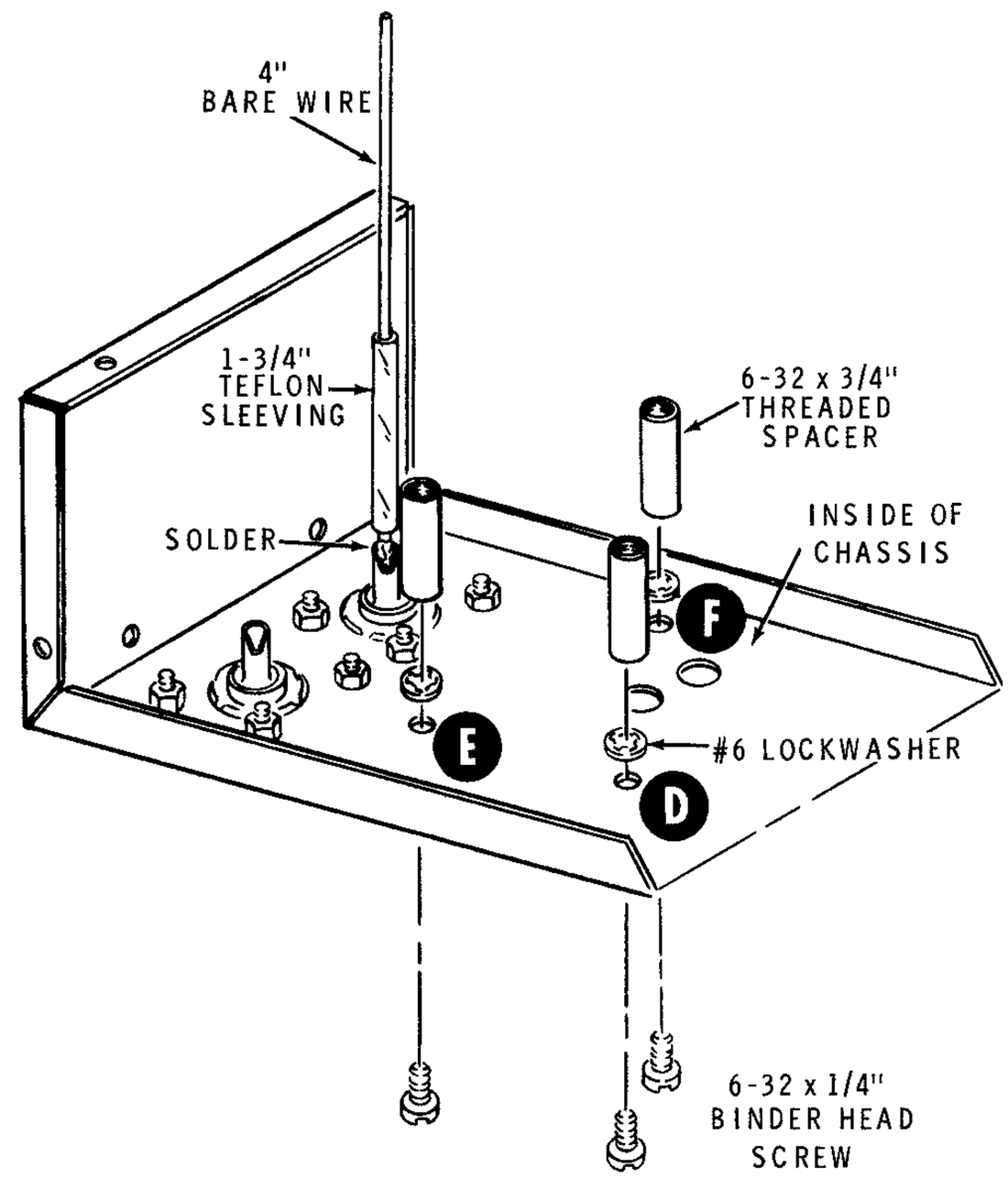

Detail 4B

( ) Place a 1-3/4" length of Teflon sleeving over the 4" bare wire and slide it all the way down to the center pin of connector B.

( ) Install a 6-32 x 3/4" threaded spacer on the chassis at D with a 6-32 x 1/4" binder head screw and a #6 lockwasher. Place the lockwasher between the spacer and the chassis as shown. Tighten the spacer finger tight.

( ) In the same manner, install 6-32 x 3/4" threaded spacers at E and F on the chassis with 6-32 x 1/4" binder head screws and #6 lockwashers. Tighten the spacers finger tight.

Refer to Detail 4C for the following steps.

( ) Turn the circuit board foil-side-up; then slide the bare wire and sleeving from connector B up through the center of toroid coil eyelet G as shown. Push the wire and sleeving through the eyelet until approximately 1/4" of the sleeving is beyond the tip of the eyelet. The bare wire must NOT short to the eyelet.

( ) Press downward on the circuit board and, at the same time, pull the board to the left and away from connectors A and B. The slide switch lever must enter slot C at the left side of the chassis.

( ) Secure the circuit board loosely to threaded spacer D with a 6-32 x 1/4" binder head screw and a #6 lockwasher.

( ) Similarly, start 6-32 x 1/4" binder head screws and #6 lockwashers into spacers E and F.

NOTE: Be sure none of the wires are pinched between the spacers and the chassis or circuit board.

( ) Tighten the three circuit board mounting screws. When the screw heads press down on the lockwashers, make sure the lockwashers, particularly at F, do not short out against the adjacent foils.

( ) Turn the chassis over and tighten the three spacer mounting screws on the outside of the chassis.

Refer to Pictorial 4 for the following steps.

( ) Bend the bare wire from eyelet G over the edge of the circuit board, making sure it doesn't touch the edge of the foil. Route the wires as directly as possible to the center pin of connector A. Cut off any excess wire length. Solder the wire to the center pin of the connector.

( ) Cut one 1" length and two 5/8" lengths of sleeving.

( ) Cut one lead of the 7.7 pF ceramic capacitor to 1/4".

( ) Insert the 1/4" lead of the 7.7 pF capacitor into the hole in the foil outlined in the Pictorial. Solder the lead to the foil. Place a 1" length of sleeving over the other lead. Wrap the end of the lead around the bare wire 1/4" from eyelet G as shown. Do not solder this lead.

( ) Cut both leads of a 100 pF mica capacitor to 1". Place a 5/8" length of sleeving on each lead. Connect one lead of the 100 pF capacitor to the other circuit board foil outlined in the Pictorial. Solder the lead to the foil. Connect the other lead of the capacitor to the bare wire 1/4" from eyelet G as shown in the Pictorial. Solder both capacitor leads to the bare wire.

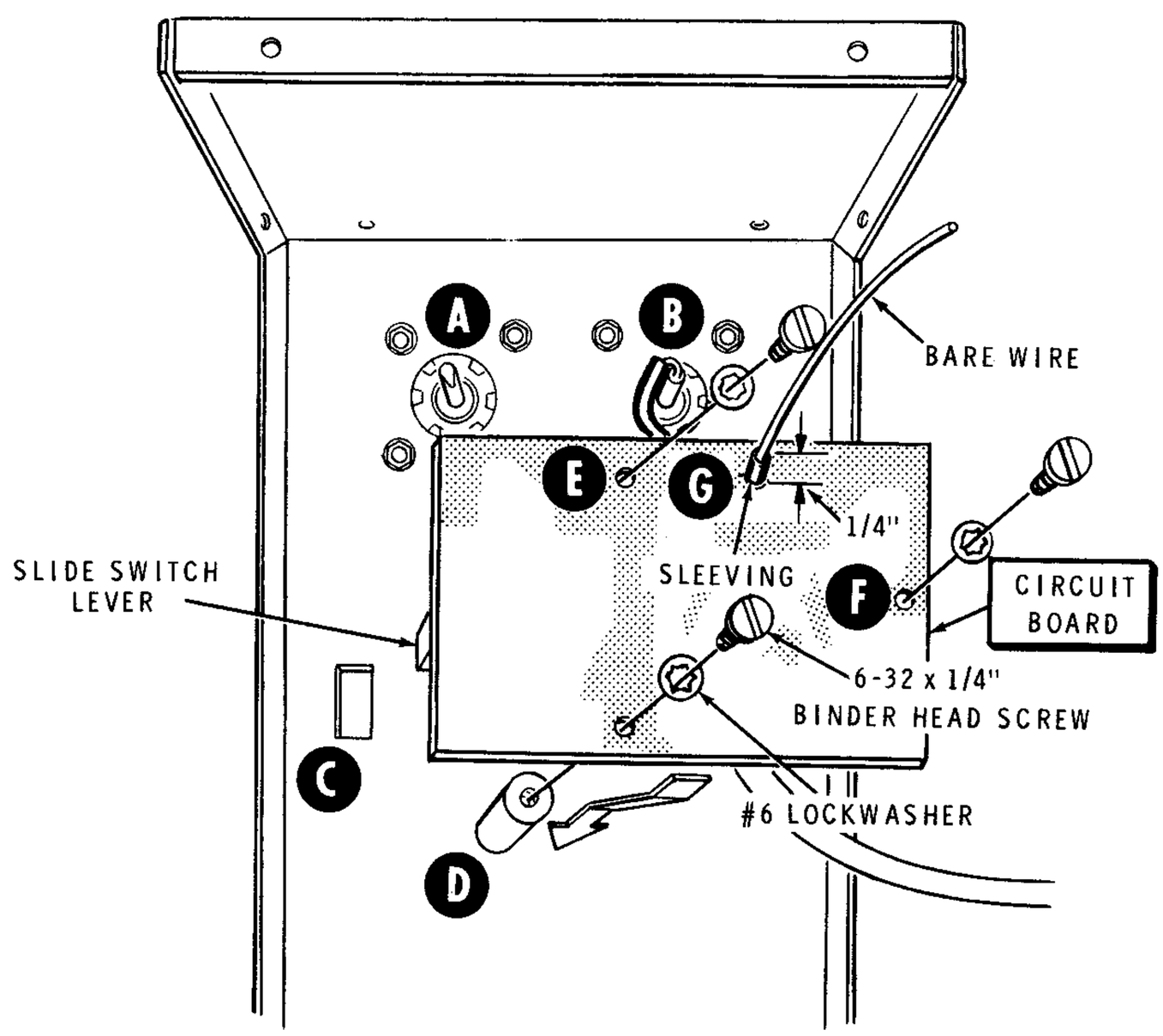

Detail 4C

NOTE: Be sure no component leads, lockwashers, or screws touch solder connections on the circuit board.

Refer to Pictorial 5 for the following steps.

( ) Pass the free end of the 5-conductor cable through opening H in the side of the remote chassis cover. Pull the cable through until most of it is through the hole.

( ) Place the remote chassis face down on the work area with the connectors to your right as shown. Now place the cover onto the chassis, so the cable emerges from the side of the cover facing you.

NOTE: Be sure the cable is positioned as shown in the Pictorial. The cable must not be positioned near connectors A or B.

( ) Secure the cover to the remote chassis with eight #6 x 1/4" sheet metal screws. NOTE: Do not use the black screws at this time.

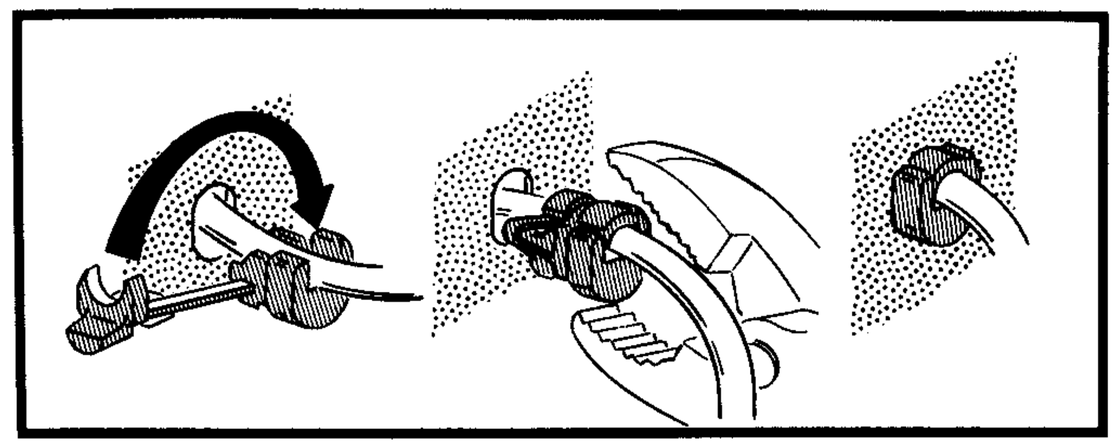

Detail 5A

( ) Refer to Detail 5A and install the cable strain relief on the 5-conductor cable in hole H on the remote chassis cover as follows: First pull the cable from the hole in the cover until it is snug; then place the clamp onto the cable 1" away from the hole. Finally, insert the strain relief in the hole with pliers.

This completes the assembly of the remote chassis. Set it aside temporarily.

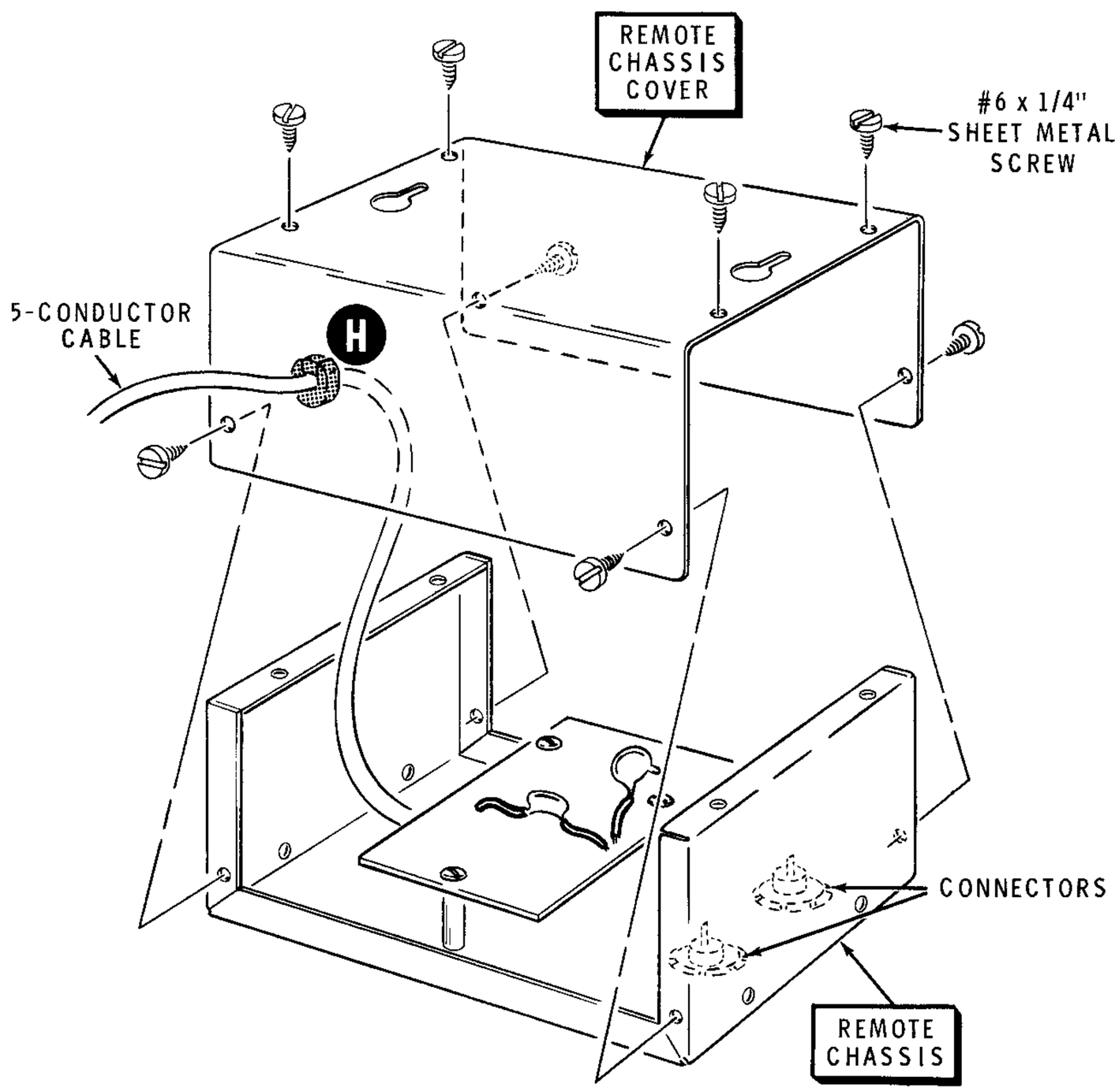

PICTORIAL 5

CABINET ASSEMBLY

Refer to Pictorial 6 (fold-out from Page 4) for the following steps.

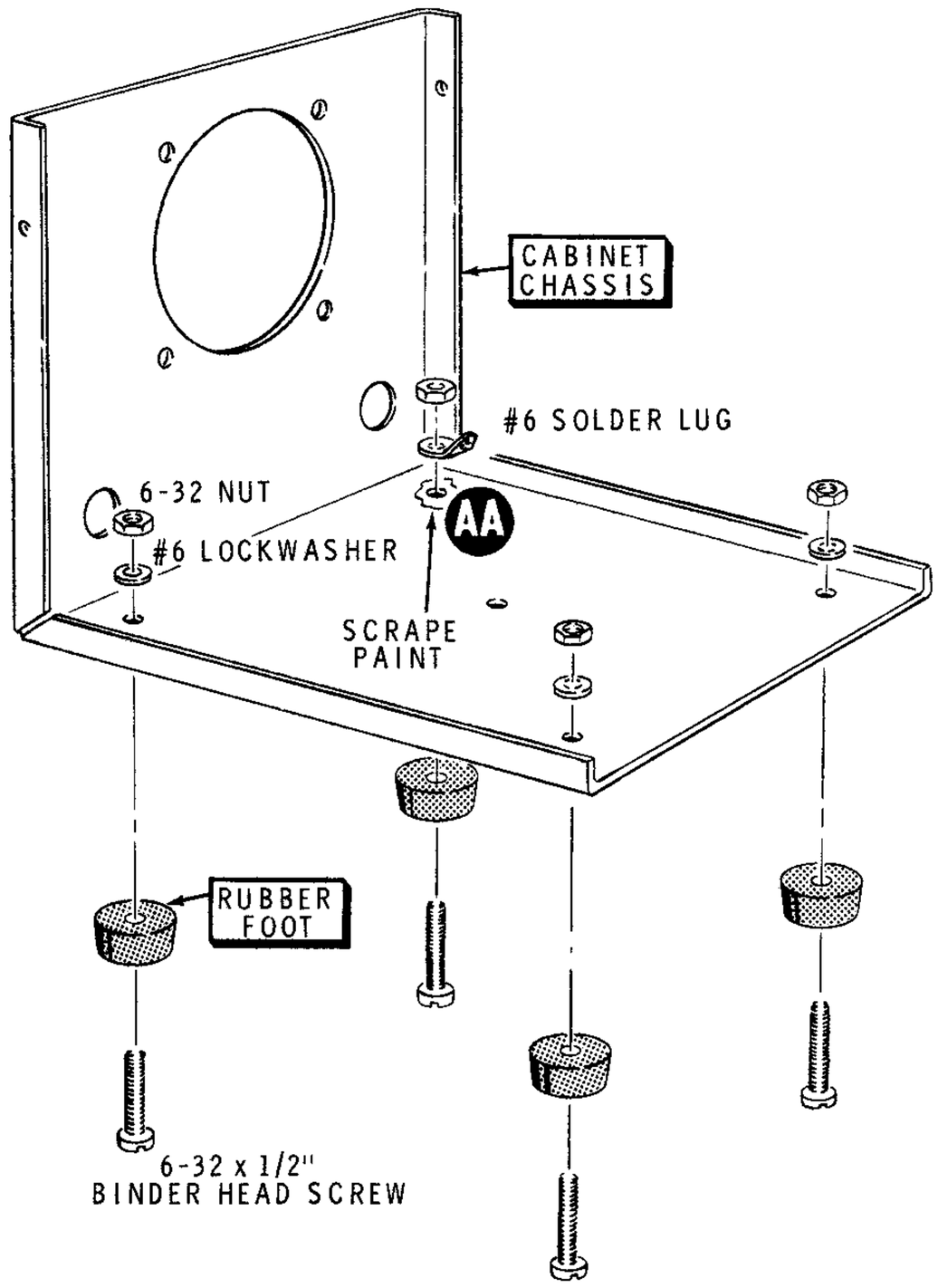

Detail 6A

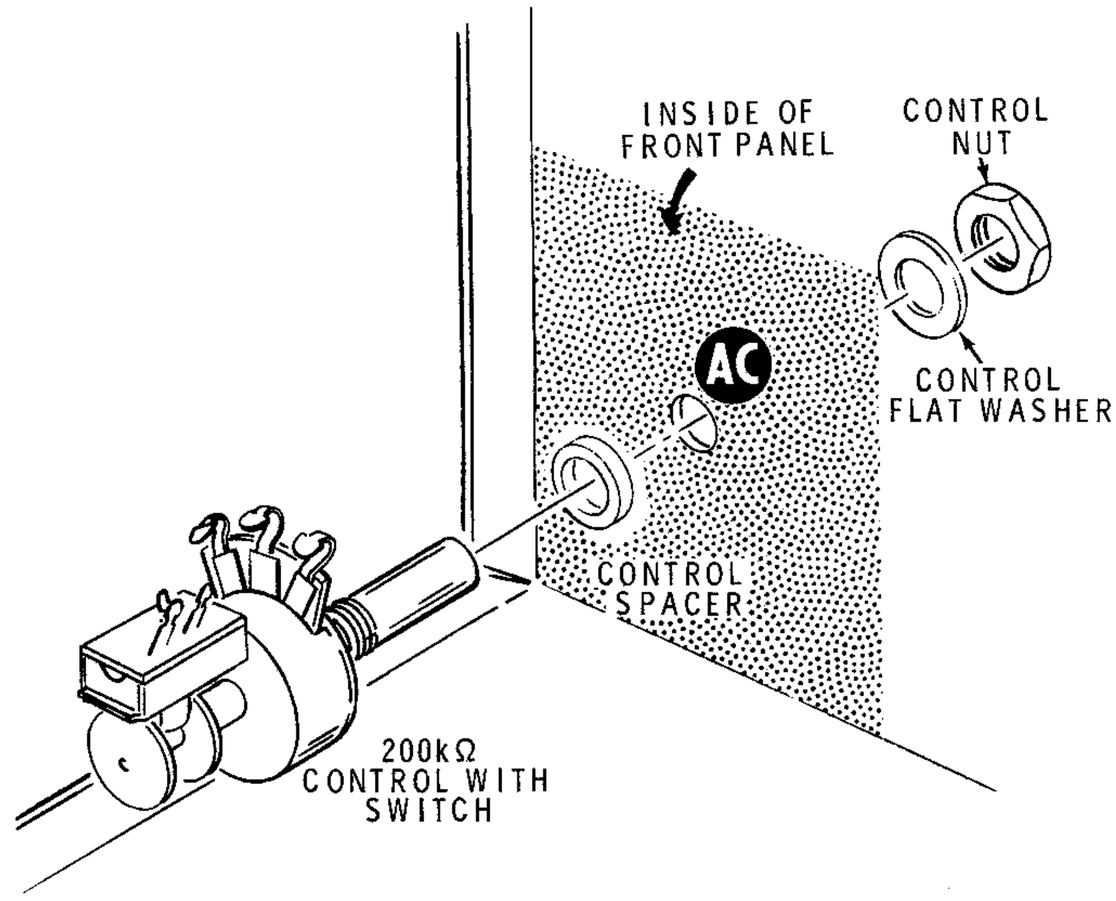

Detail 6B

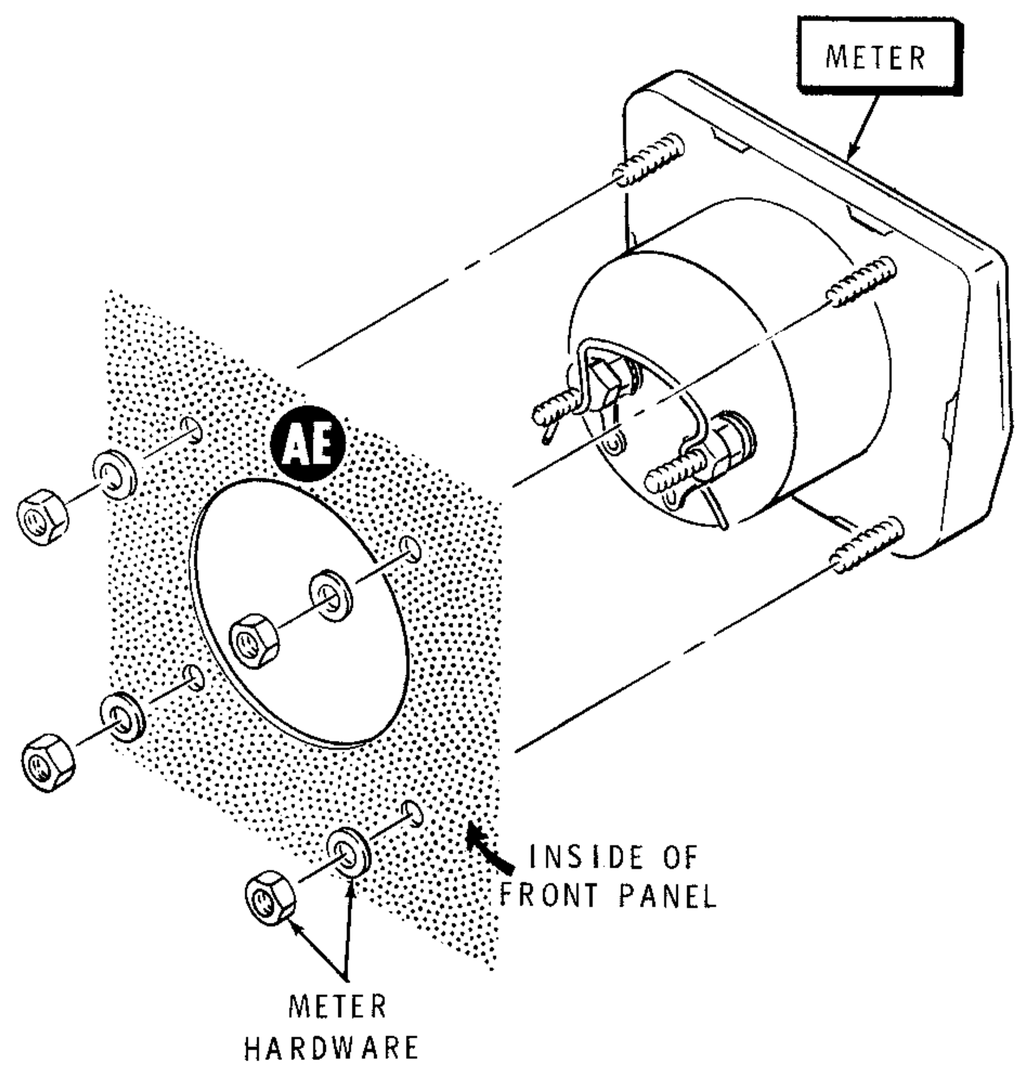

Detail 6C

( ) Refer to Detail 6A and scrape the paint from around hole AA to provide a good ground for the solder lug.

( ) Install four rubber feet on the cabinet chassis with four 6-32 x 1/2" binder head screws, three #6 lockwashers, and four 6-32 nuts. Use a #6 solder lug at AA in place of a #6 lockwasher. Position the solder lug as shown.

( ) Install the 200 kΩ control with switch at AC on the front panel with a control spacer, a control flat washer, and a control nut, as shown in Detail 6B.

( ) Remove the meter from its carton and locate the meter hardware in the same container. Mount the meter at AE, using the meter hardware as shown in Detail 6C. NOTE: Do not overtighten the meter nuts, as the meter case can be broken. Make sure the meter top is parallel with the top of the panel.

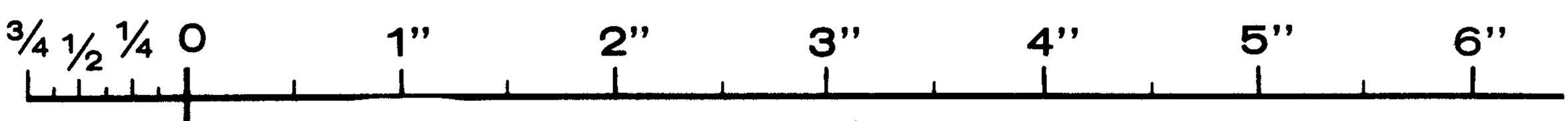

Refer to Pictorial 6 for the following steps.

( ) Place the cable clamp around the free end of the 5-conductor cable so 1" of the outer insulation extends beyond the clamp as shown. Secure the clamp to the chassis at AB with a 6-32 x 1/2" binder head screw, a D-washer, a #6 lockwasher, and a 6-32 nut.

( ) Refer to Detail 6D and install the 3-position rotary switch at AD with a control lockwasher, a control flat washer, and a control nut. Position the switch as shown in Pictorial 6.

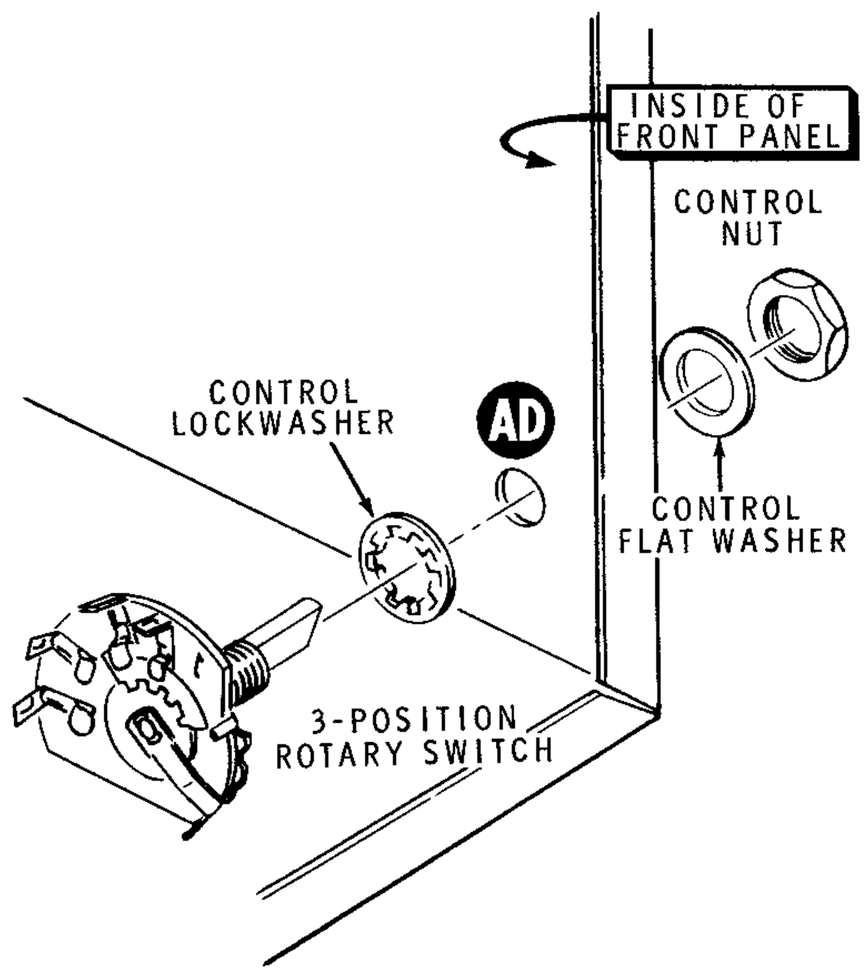

Detail 6D

Refer to Detail 6E for the following steps.

( ) Connect the black wire coming from the 5-conductor cable to solder lug AA (NS).

( ) Connect the brown wire coming from this cable to lug 4 of rotary switch AD (NS).

( ) Locate three .001 μF ceramic capacitors. Cut both leads of each capacitor to 3/4".

( ) Connect a .001 μF ceramic capacitor from lug 4 of switch AD (S-2) to solder lug AA (NS).

( ) Connect the red wire coming from the 5-conductor cable to lug 3 of rotary switch AD (NS).

( ) Connect a .001 μF ceramic capacitor from lug 3 of switch AD (S-2) to solder lug AA (NS).

( ) Connect a .001 μF ceramic capacitor from lug 2 of switch AD (NS) to solder lug AA (NS).

( ) Locate the 4" length of 5-conductor cable previously removed from the original cable length. Carefully cut about 1/2" of the outer insulation from the five wires. Then, with a pair of long-nose pliers, pull the red, the black, and the green wires out of the outer insulation. Discard the remaining two wires and the outer insulation.

( ) Prepare the 4" red, black, and green wires by removing 1/4" of insulation from both ends of each wire. Then twist the ends tightly and apply a small amount of solder to each to hold the small strands together.

( ) Connect one end of the 4" red wire to lug 2 of the rotary switch (S-2).

( ) Connect one end of the 4" black wire to solder lug AA (S-5). Use enough solder to make sure all five wires and leads are well soldered.

( ) Connect one end of the green wire to lug 1 of the rotary switch (S-1).

( ) Carefully cut all the excess wire and lead ends that extend beyond the lugs of the rotary switch.

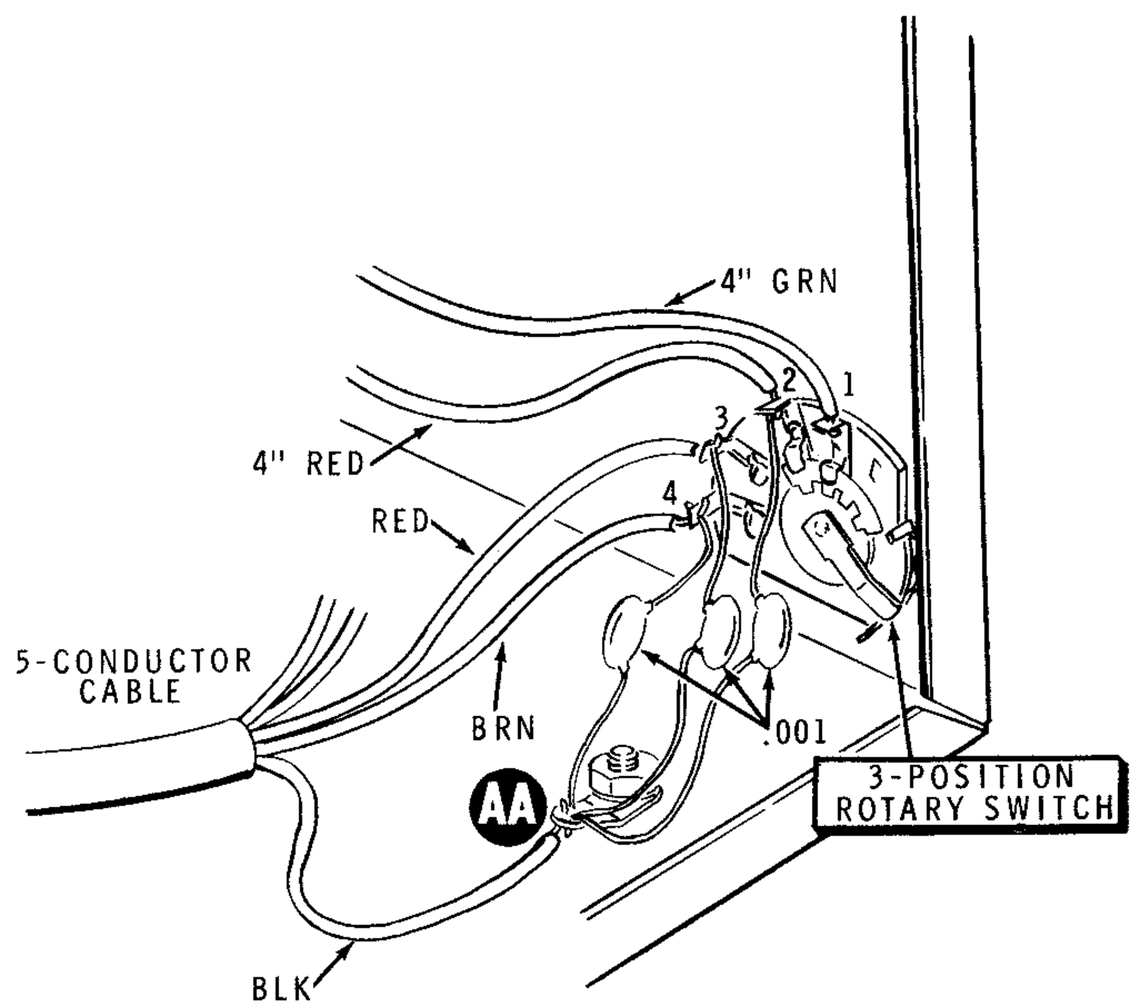

Detail 6E

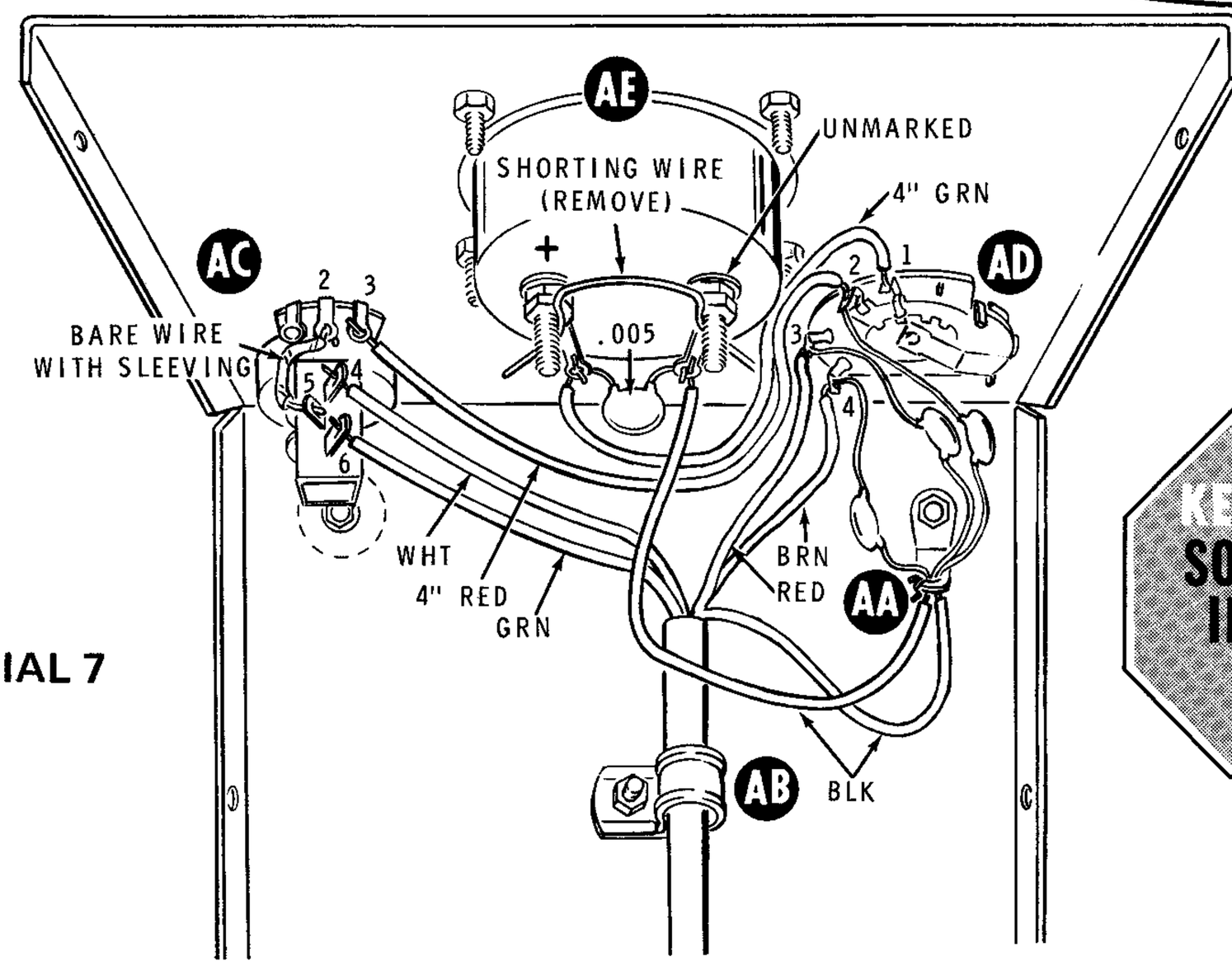

PICTORIAL 7

CABINET WIRING

Refer to Pictorial 7 for the following steps.

( ) Connect the green wire coming from lug 1 of switch AD to the positive (+) terminal lug of meter AE (NS).

( ) Connect the red wire coming from lug 2 of switch AD to lug 3 of control switch AC (S-1).

( ) Connect the free end of the 4" black wire from solder lug AA to the negative (unmarked) terminal lug of meter AE (NS).

( ) Cut both leads of a .005 μF ceramic capacitor to 1/2". Connect this capacitor between the positive (+) terminal lug (S-2) and the negative (unmarked) terminal lug (S-2) of meter AE.

( ) Locate the bare lead length saved when the circuit board was assembled.

( ) Connect one end of this bare wire to lug 2 of control-switch AC (S-1).

( ) Cut a 1/2" of Teflon sleeving and push this onto the wire installed in the previous step.

( ) Connect the free end of this wire to lug 5 of control-switch AC (S-1).

( ) Connect the green wire coming from cable clamp AB to lug 6 of control-switch AC (S-1).

( ) Connect the white wire coming from cable clamp AB to lug 4 of control-switch AC (S-1).

( ) Remove and discard the shorting wire from the terminals of meter AE.

This completes the wiring of the cabinet.

Refer to Pictorial 8 (fold-out from Page 15) for the following steps.

( ) Loosely secure the cabinet top to the chassis with four #6 x 1/4" black sheet metal screws as shown.

( ) Start an 8-32 x 1/4" setscrew into each of the knobs.

( ) Turn the Function switch shaft to its center position.

( ) Install a knob on the Function (SWR-2000-200) switch shaft. Position the knob so the pointer is directly toward the "2000" on the front panel. Tighten the setscrew securely.

( ) Turn the SWR Sens control shaft fully counterclockwise. Place the other knob on the control shaft and position it so the pointer is at the 7 o'clock position (at the lower end of the rotation arrow); then, tighten the setscrew securely.

CALIBRATION

Before calibrating the Meter, prepare an alignment tool in the following manner: Locate the small 1/8" x 3/4" alignment tool blade. Refer to Figure 1 and install the blade into the small end of the nut starter as shown. Leave 1/8" of the blade protruding from the end of the alignment tool.

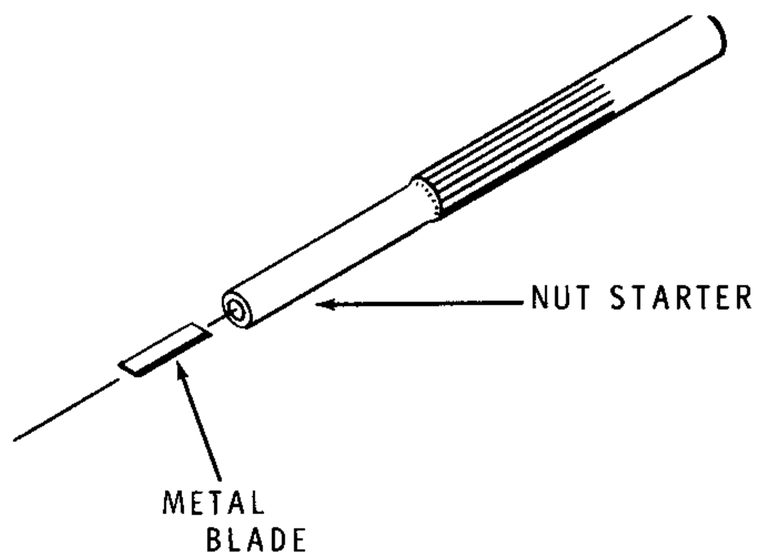

Figure 1

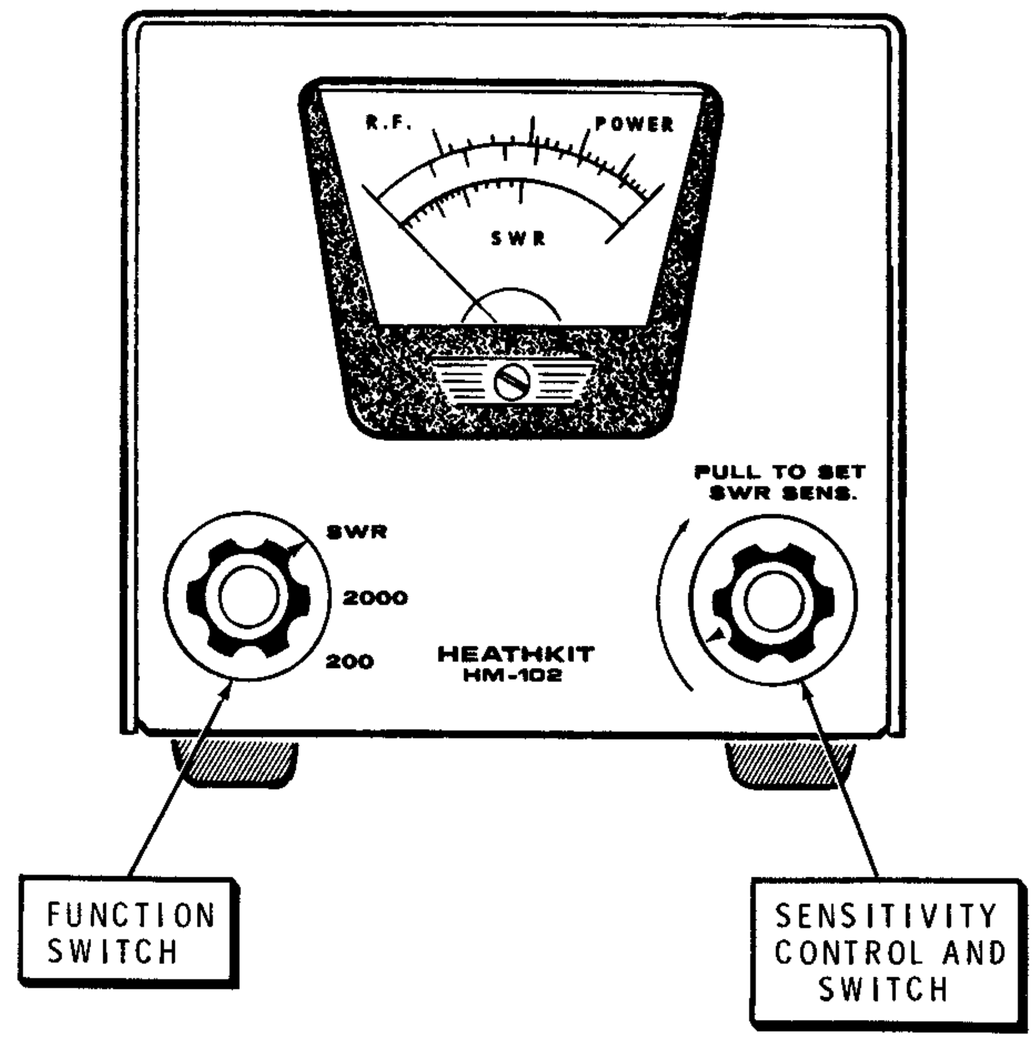

Figure 2

NOTE: During the following steps, the remote cabinet may be placed so you can easily make the adjustments while watching the meter.

SWR BALANCE ADJUSTMENT

NOTE: Perform steps 1 through 8 to make sure you have a normal output from your transmitter, through the meter, to your dummy load. You must obtain a reading on the RF Power Meter scale before continuing with steps 9 through 15.

1.( ) Check to see that the meter needle is directly over the zero on the scale. If it is not, adjust the screw head on the meter case slightly to position the needle over the zero.

2.( ) Connect a 50-ohm noninductive load, such as the Heathkit Cantenna, to the remote chassis OUTPUT jack. (See Figure 3 on Page 14).

3.( ) Connect the transmitter output to the INPUT jack on the remote chassis. (See Figure 3.)

4.( ) Set the FUNCTION switch to 200. (See Figure 2.)

5.( ) Push the SWR SENS control knob in and turn the control fully counterclockwise.

6.( ) Set the CALIBRATION switch, on the rear of the remote chassis, to NORM (see Figure 3).

7.( ) Turn on the transmitter, and set it to the CW mode in the 40-meter band. Then tune the transmitter and watch the RF Power Meter needle move up-scale. If the meter needle does not move up-scale, refer to the "In Case of Difficulty" section of this Manual.

8.( ) Turn the Transmitter output level down.

9.( ) Set the FUNCTION switch to SWR.

10.( ) Increase the transmitter output level until a reading of approximately 25 is seen on the 200 RF Power Meter scale. Even if the meter reading is not this high, proceed with the following steps.

11.( ) With the SWR SENS control knob still pushed in, set it for a full-scale reading.

12.( ) Refer to Figure 3, and adjust SWR NULL trimmer C4, through the rear of the remote chassis, with the alignment tool (nut starter) for the best null or greatest dip of the meter needle. This reading should be at or near zero. NOTE: Do not use any metal tool other than the nut starter blade to make these adjustments.

13.( ) Increase the transmitter output to full power and readjust SWR NULL trimmer C4. Make this final adjustment carefully and precisely. The accuracy of the instrument depends on a well-balanced bridge circuit.

14.( ) Repeat steps 12 and 13.

15.( ) After removing the paper backing place the 1" square insulator paper over the hole to trimmer C4. This adjustment must not be disturbed during the following steps.

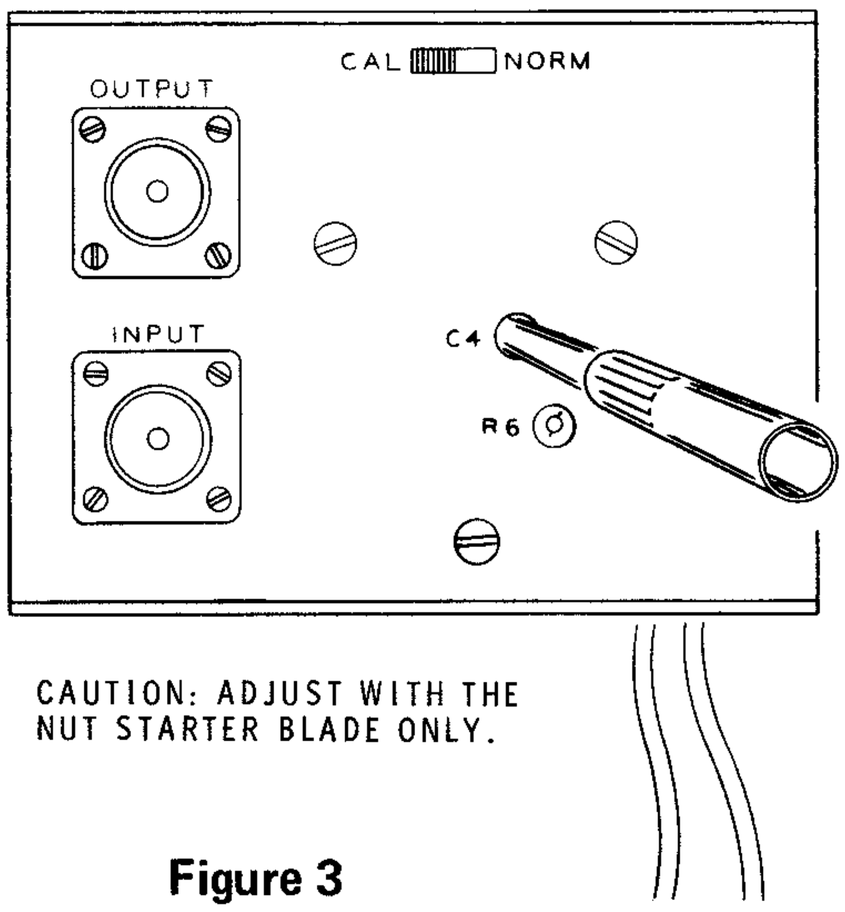

Figure 3

Do not disconnect the RF Power Meter, the transmitter, or the load; they will be used in the following section.

POWER METER

This section of the Manual contains two calibration procedures: one for calibrating the RF Power Meter on the 40-meter band, and one for calibrating the Meter on any one of the other bands.

For maximum accuracy, the Meter should be calibrated on the 40-meter band, even if it is going to be used on the other bands. Therefore, if your transmitter will tune to the 40-meter band, use the "Normal Calibration" procedure to calibrate your Meter. However, if your transmitter will not tune to the 40-meter band, use the "Calibration on Other Bands" procedure. Since the meter readings are more accurate in the upper-half of the meter scale, it is desirable to use a transmitter that is capable of delivering at least 100 watts of output power for either calibration procedure.

Normal Calibration

( ) Turn the FUNCTION switch to 200.

( ) Adjust the transmitter output to 100 watts.

( ) Complete the calibration as follows:

1. Set the CALIBRATE switch on the remote chassis to CAL and note the meter reading.
2. Now set the CALIBRATE switch to NORM.
3. Adjust POWER CALIBRATE control R6 with the alignment tool so the meter reads the same as noted in step 1.
4. Repeat steps 1 through 3 until the meter readings for the CAL and NORM switch positions are the same.

Leave the CALIBRATE switch in the NORM position.

This completes the calibration of your RF Power Meter.

Calibration on Other Bands

NOTE: During the following steps you will need a VTVM with a high impedance input and an RF probe, or an RF voltmeter to measure the RF output of your transmitting system.

If you cannot tune your transmitter to the 40-meter band, acceptable calibration accuracy can be obtained on another band by using the following power formula:

$$P = \frac{E^2}{R}$$

Where P = watts output
E = RF voltage across the load
R = load resistance

To determine E, measure the RF voltage across the 50-ohm resistive load (Cantenna) with an RF voltmeter or a VTVM equipped with an RF probe.

With this method, the watts output determined by the formula is compared with the watts reading on the scale of the Power Meter. The Power Meter is then adjusted to read the same as the power determined by the formula.

EXAMPLE: If you wish to use the 25-watt figure on the meter scale for calibration and you are using a 50-ohm resistive load, set your transmitter output so the RF voltmeter across the load reads 35-volts RF.

$$25 \text{ watts (P)} \times 50 \text{ ohms (R)} = 1250 \ (E^2)$$
$$E = \sqrt{1250} = 35 \text{ volts (approximately)}$$

When the RF voltmeter indicates 35 volts, you know the transmitter is putting out 25 watts; therefore, you can adjust the RF Power Meter to indicate 25 watts.

Any other figure for watts between 10 and 2000 may be substituted in the formula and in the example.

If you have an accurate RF wattmeter, adjust R6 to the same reading as shown on the wattmeter.

1. ( ) Select the power you wish to obtain from your transmitter.

2. ( ) Use the power formula to calculate the RF voltage that should appear across the resistive load when the transmitter is putting out the selected power (refer to the example).

3. ( ) Turn the FUNCTION switch to 200 or 2000, depending upon the output power of your transmitting system.

4. ( ) Connect the RF voltmeter across the resistive load. NOTE: Do not exceed the current rating of your RF probe.

5. ( ) Adjust the transmitter output so the RF voltage across the resistive load is the same as the calculated RF voltage.

6. ( ) Adjust control R6 through the rear of the remote chassis so the RF Power Meter indicates the power you selected to obtain from the transmitter.

This completes the calibration of your RF Power Meter.

FINAL ASSEMBLY

Refer to Pictorial 9 for the following steps.

NOTE: In the following steps, the remote chassis will be installed in the cabinet. If you wish to place the remote chassis in some location away from the cabinet, so the remote unit will be near the transmission lines, do not complete the following steps. In this case, place the four black screws in a small envelope and tape them to the floor of the cabinet.

( ) Position the remote chassis inside the top rear opening of the cabinet. Secure the remote chassis to the cabinet with four #6 x 1/4" black sheet metal screws.

( ) Tighten the remaining four black cabinet screws.

( ) Coil the 5-conductor remote cable neatly and slide it into the opening beneath the remote unit.

( ) Turn the cabinet upside down. Remove the paper backing from the blue and white label; then, press the label firmly onto the bottom of the cabinet as shown on Pictorial 8 (fold-out from this Page).

This completes the step-by-step assembly of your RF Power Meter.

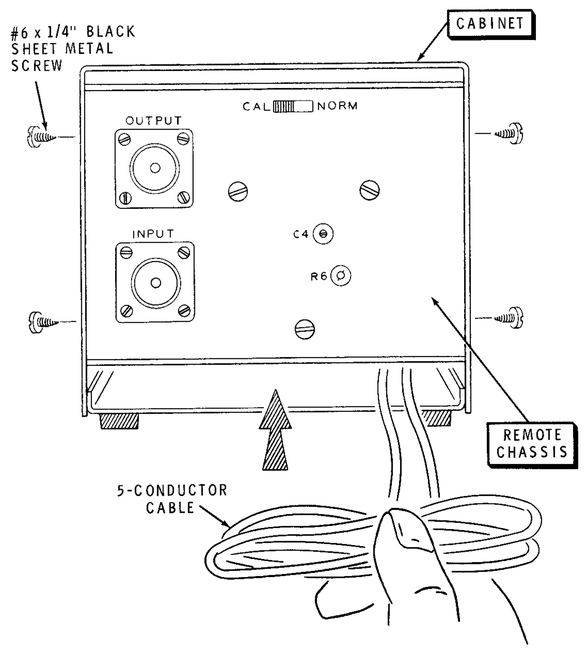

PICTORIAL 9

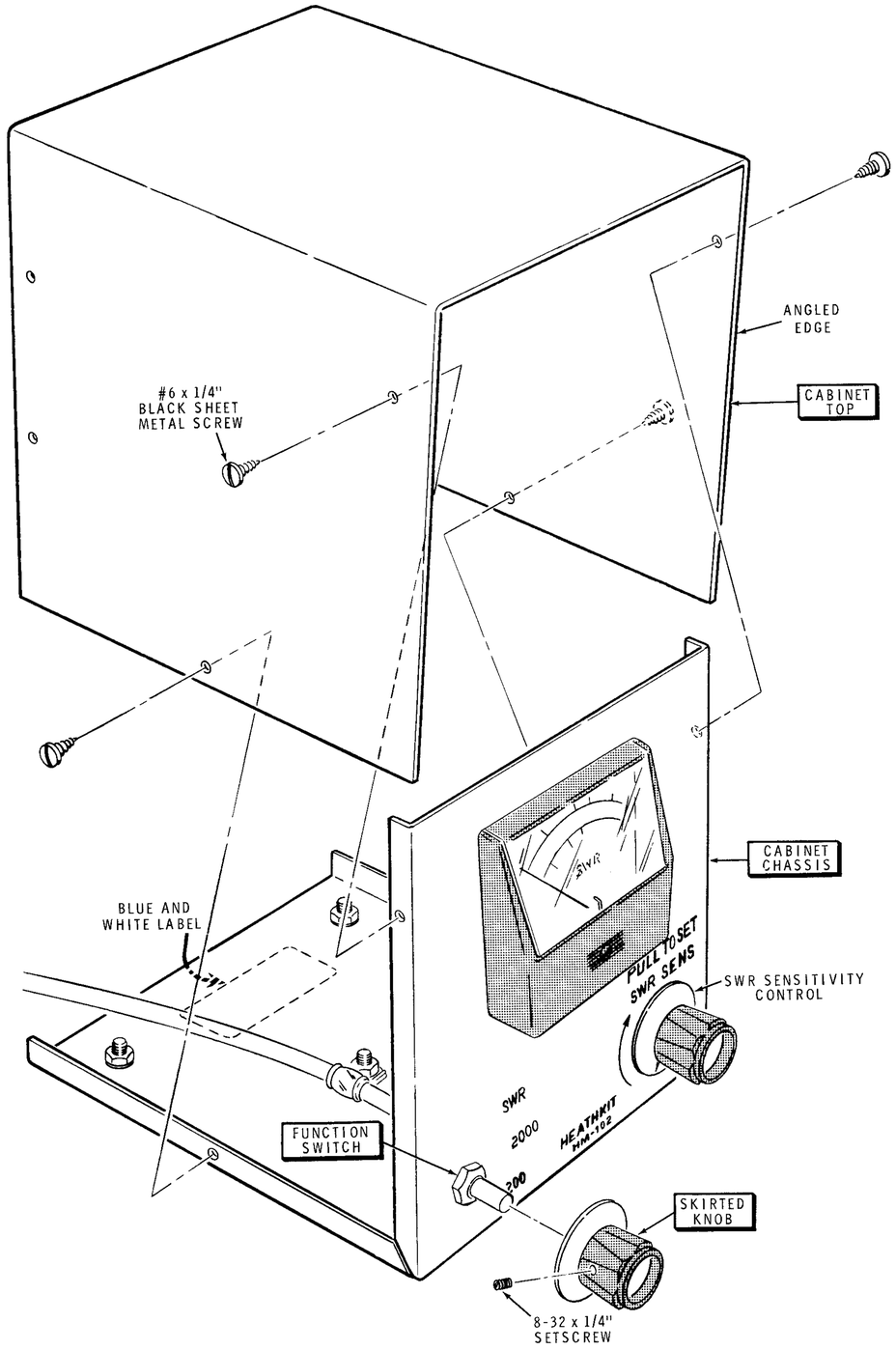

PICTORIAL 8

OPERATION

SWR METER

NOTE: The RF power meter SWR bridge can only be used with 50 ohm nominal transmission lines. Also it will not work on transmission lines that are used as tuned feeders, since tuned feeders normally have a high SWR.

1. Turn the FUNCTION switch to SWR.
2. Pull the SWR SENS switch out and turn it fully counterclockwise.
3. Apply power to the transmitter and tune it for maximum RF output reading. Disregard the Power Meter readings at this time.
4. Turn the SWR SENS control clockwise for a midscale meter reading. A minor "touch-up" tuning of the transmitter may show an increase on the Meter. This indicates a closer match between the transmitter and the transmission line.
5. Turn the SWR SENS control clockwise to give a full-scale meter reading.
6. Push the SWR SENS control knob in and read the SWR ratio directly on the lower meter scale.

Normal Operating Characteristics

The Power Meter (SWR Bridge) may be left in the transmission line at all times for continuous monitoring purposes.

The peaks on controlled carrier modulation will "kick" the meter needle upward. SSB and DSB signals will give a bouncing indication when transmitting; so no SWR measurement can be made with these signals. Therefore, use a single-tone or CW carrier with sideband transmitters when taking readings. When operating SSB, any indication with no modulation indicates spurious or parasitic emission, or poor carrier suppression.

Physical Placement and Losses

The detector unit may be removed from the cabinet and placed at a location more convenient for connection to your transmission line. The 6′ interconnecting cord that is furnished may be replaced by a longer one, if this is desired. You may even position the detector unit at the antenna, although there is always the possibility of RF pickup on the extended interconnecting cable from the transmission line. If this should occur, the use of properly grounded, shielded interconnecting cable may be required. NOTE: The remote cabinet is not weatherproofed. Any outdoor application should be temporary.

The SWR meter readings may vary if the Meter is placed at different locations in the transmission line, or if the length of the transmission line is changed. For this reason, assume that the highest SWR reading is most correct. Keep in mind that the closer the SWR approaches 1:1, the more accurate the Power Meter becomes.

Misleading readings may be obtained with long transmission lines since the losses in the cable tend to "smooth out" the standing waves, giving a much better indication at the transmitter than actually exists at the antenna. Therefore, if you are using a transmission line long enough to have appreciable losses, locate the Power Meter near the antenna, especially when adjusting beams or tuning traps. You can better understand the extent of this effect when you realize that a line with a 3 dB loss will show an SWR of 3 when it is terminated in a dead short. A line with a loss of over 10 dB will show an SWR of practically 1:1, on this or any other SWR meter, regardless of what load or termination is connected at the far end.

The power losses in these cases are occurring in the cable, but the SWR meter reading will not indicate that anything is wrong. When in doubt, make measurements at the antenna and at the transmitter, so future changes in the readings will be meaningful. The values of cable losses at various frequencies can be obtained from Figure 4. These losses become worse as time and moisture affect the cable.

With a high SWR, the transmission line losses may become so great that the radiated power is appreciably reduced; with high-power transmitters, the cable ratings may be exceeded. Figure 5 shows the effect of increasing cable losses caused by various values of SWR. When these losses occur, the RF power is turned into heat in the cable instead of being radiated from the antenna.

To obtain total losses in a given length of coaxial cable, determine the dB loss per foot of the cable from Figure 4. This is done by finding your operating frequency on the bottom line of the chart, and moving up to find the type of cable used. By looking at this same level on the left-hand side of the chart, you can read the dB loss per 100 feet of the cable at that frequency.

Now determine the additional loss caused by the SWR from Figure 5 as follows: Use the amount of loss determined from Figure 4 and find this value on the bottom line of Figure 5. Now move up the graph until you come to the SWR of your antenna system. Move over to the left-hand side of the graph and determine the amount of loss caused by the SWR. To obtain the total loss of your system, add the value from Figure 4 to the value from Figure 5. Multiply the total loss by the cable length in feet. Then divide by 100.

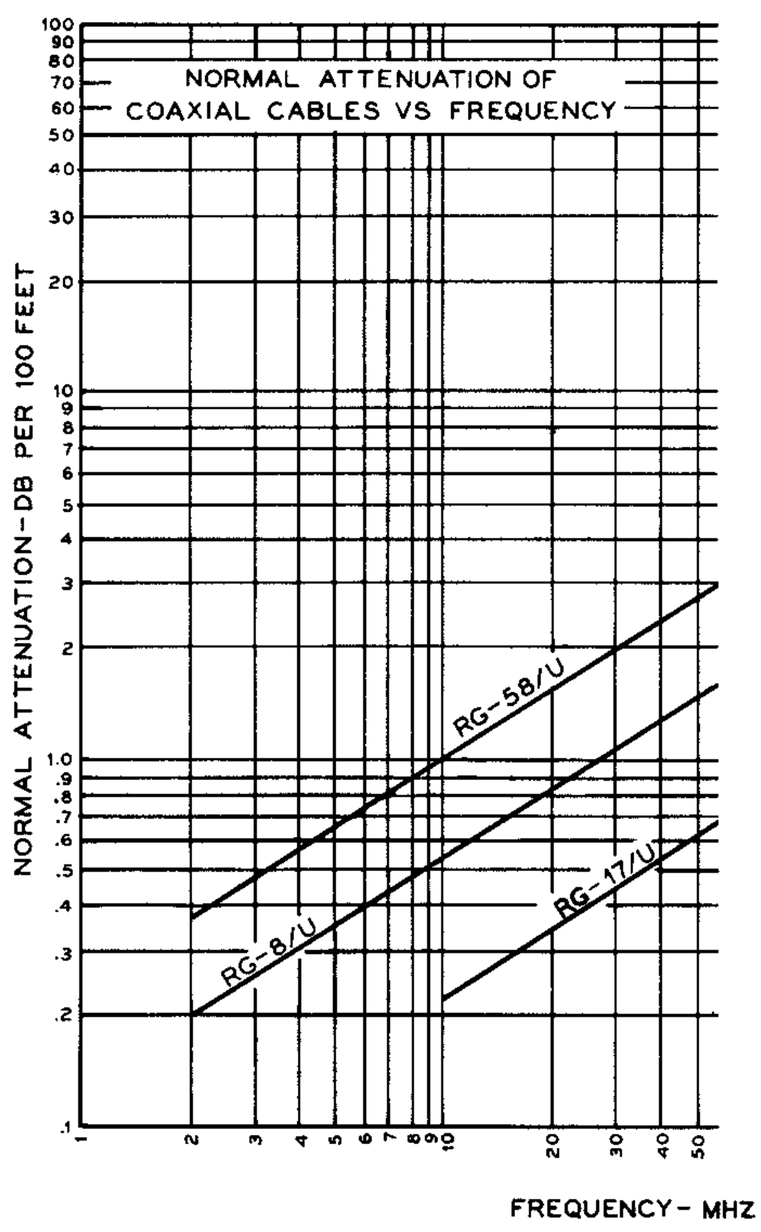

Figure 4

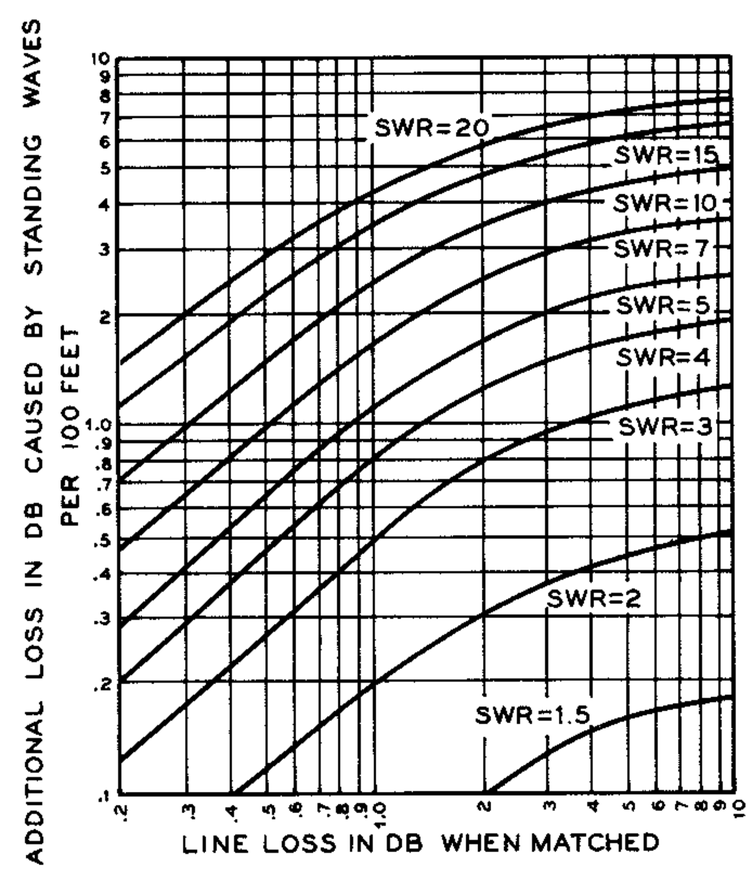

Figure 5

Loading

The load presented to the transmitter output circuit may create conditions that make it touchy or impossible to load the transmitter. With a low SWR, the load that the transmitter sees is practically pure resistive. However, at a high SWR, the apparent load may change from a very low to a very high resistance, accompanied by either capacitive or inductive reactance. These resistance and reactance values change when the transmission line length or frequency is changed.

Remember when you are using 50 Ω nominal unbalanced feed lines that the SWR cannot be changed by changing the transmission line length. However, the loading to the transmitter may be changed considerably; thus making it appear that "pruning" the cable length offers improvement, when it actually does not affect the SWR.

The SWR can only be changed by changing the load or termination at the end of the cable. If the transmission line length is changed, for example, with 50 Ω cable and an SWR of 3, the apparent load to the transmitter may vary from 16-2/3 Ω to 150 Ω resistive in series with reactance varying from 66-2/3 Ω capacitive, to zero, to 66-2/3 Ω inductive. If the transmitter output tuning adjustments will not accommodate this impedance range, the transmitter will be difficult to load until the load is properly matched to the line. When the load is matched, the SWR will be low, approaching 1:1.

POWER METER

The operation of the Power Meter is relatively uncomplicated. Merely place the FUNCTION switch in either the 200- or 2000-watt position; then read the corresponding scale on the meter scale to obtain the power output of the transmitter. A load must be connected to the output jack of the Meter.

Low Power Measurments (1 to 20 Watts)

1. Place the Function switch at 200.
2. Increase the transmitter output to 10 on the 200 scale.
3. Turn the Function switch to SWR.
4. Pull out the SWR SENS switch and adjust the meter reading to 100 on the 200 scale.
5. Read from 0 to 20-watts directly from the 200 scale providing the SWR SENS control is not touched.

IN CASE OF DIFFICULTY

1. Recheck the wiring. Trace each lead in colored pencil on the Pictorial as it is checked. It is frequently helpful to have a friend check your work. Someone who is not familiar with the unit may notice something consistently overlooked by the constructor.
2. It is interesting to note that about 90% of the kits that are returned for repair, do not function properly due to poor connections and soldering. Therefore, many troubles can be eliminated by reheating all connections to make sure that they are soldered as described in the "Soldering" section of the "Kit Builders Guide."
3. Check the values of parts. Be sure that the proper part has been wired into the circuit, as shown in the Pictorial diagrams and as called out in the wiring instructions.
4. Check for bits of solder, wire ends, or other foreign matter which may be lodged in the wiring.
5. A review of the Circuit Description and the Schematic Diagram may prove helpful in locating a trouble.

NOTE: In an extreme case where you are unable to resolve a difficulty, refer to the "Customer Service" information inside the rear cover of the Manual. Your Warranty is located inside the front cover of the Manual.

Troubleshooting Chart

PROBLEM	POSSIBLE CAUSE
Meter reads down-scale on SWR or wattmeter.	1. Meter leads reversed. 2. Diode D1 or D2 reversed.
Higher meter reading for SWR Set than for SWR.	1. Input and output plugs reversed. 2. Pickup coil L1 leads reversed. 3. Switch S3 incorrectly wired.
Calibrator portion of meter not functioning correctly.	1. Input and output plugs reversed. 2. Diode D3 reversed. 3. Capacitor C7, C8, C11, or C9. 4. Resistor R5.
SWR reading while transmitter is off.	1. Nearby transmitter in operation.

SPECIFICATIONS

Frequency Range	1.8 to 30 MHz.
Wattmeter Accuracy	±10% of full-scale reading.*
Power Capability	To 2000 watts.
SWR Sensitivity	Less than 10 watts.
Impedance	50 ohms nominal.
SWR Bridge	Continuous to 2000 watts P-P.
Connectors	UHF type SO-239.
Dimensions	5-1/4" wide, 5-1/16" high, and 6-1/2" deep, assembled as one unit.
Net Weight	2-1/2 lbs.

*Using a 50 Ω noninductive load.

The Heath Company reserves the right to discontinue products and to change specifications at any time without incurring any obligation to incorporate new features in products previously sold.

CIRCUIT DESCRIPTION

Refer to the Schematic (fold-out from Page 23) while reading this "Circuit Description."

SWR BRIDGE CIRCUIT

Toroid coil L1 is a current pickup element for forward and reflected power. A bus wire is routed from the Input jack through toroid coil L1, and then to the Output jack. A transmitted signal routed along this wire induces a current in coil L1. The voltage formed in coil L1 is rectified by diode D3 and decoupled by capacitor C5 and resistor R4. Resistor R3 creates a load for forward power readings. Reverse power readings are determined, in the same manner, by the circuit consisting of diode D2, capacitor C2, and resistor R1.

Forward and reverse voltages are connected to the meter through switch S2, Sensitivity control R11, and Function switch S3.

Resistor R7 is a ground-return path for diodes D2 and D3. Capacitors C4, C12, C13, and C1 form a voltage divider circuit to balance the capacitive effects of the bifilar (doubled) windings in coil L1, which provides correct SWR readings.

POWER METER CIRCUIT

Current is induced in toroid coil L1 in the same manner as for the SWR bridge circuit. Resistor R2 forms a load across coil L1 to reduce the Q of the coil circuit. This prevents the transmitted frequency from affecting the wattmeter.

The wattmeter is calibrated by measuring the voltage at control R6, which varies the power going to the meter. Resistors R8 and R9 are voltage dividers for the two power ranges: 200 watts and 2000 watts.

Capacitors C7 and C8, diode D1, and voltage divider resistor R5 through switch S1 complete a voltmeter circuit for the wattmeter.

By using an accurate device, such as an RF probe with a VTVM or a wattmeter calibrator, this Power Meter can be calibrated to a desired degree of accuracy.

Ferrite beads L2 through L6 prevent RF from traveling through the 5-conductor cable into the readout circuits.

CIRCUIT BOARD X-RAY VIEW

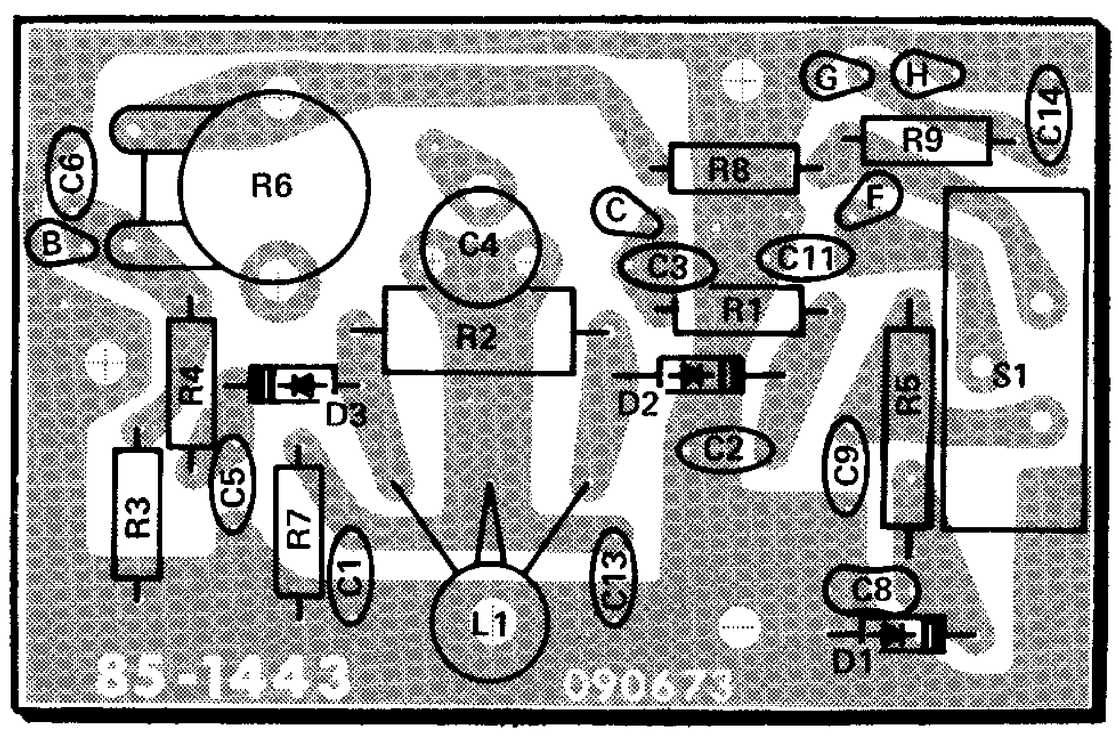

REMOTE CHASSIS PHOTO

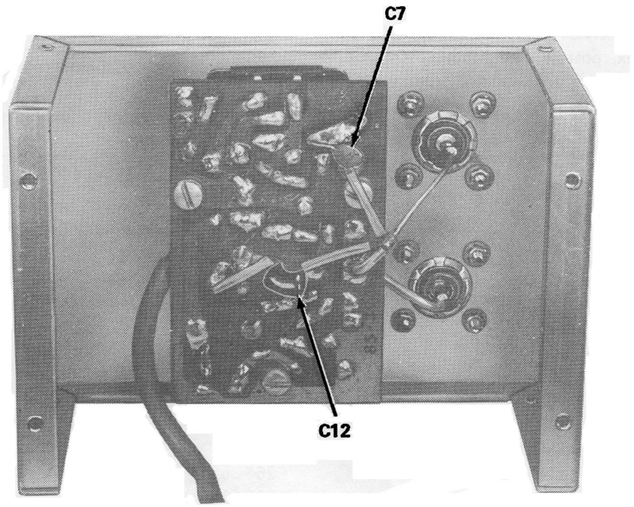

CABINET PHOTO

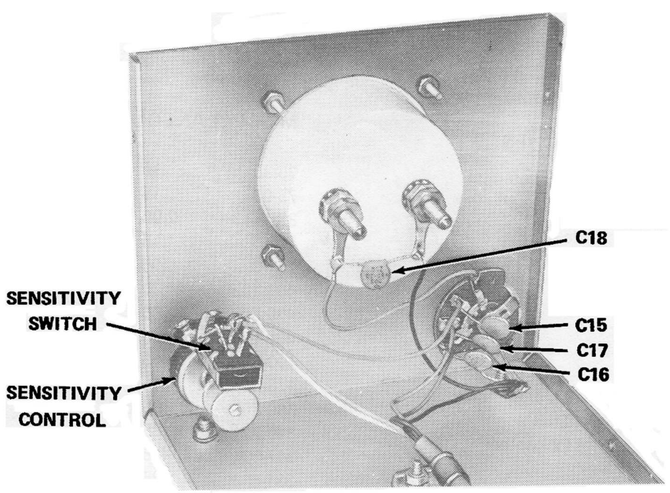

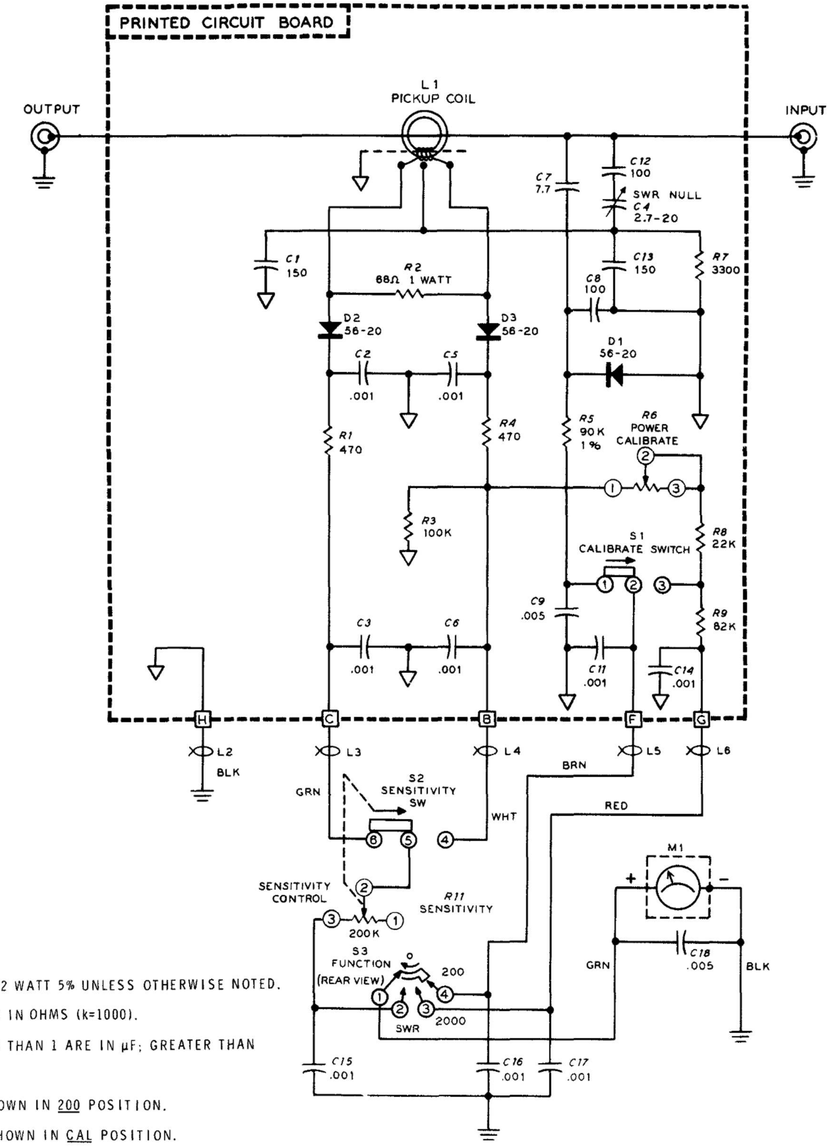

NOTES:

1. ALL RESISTORS ARE 1/2 WATT 5% UNLESS OTHERWISE NOTED. RESISTOR VALUES ARE IN OHMS (k=1000).
2. ALL CAPACITORS LESS THAN 1 ARE IN µF; GREATER THAN 1 ARE IN pF.
3. FUNCTION SWITCH SHOWN IN 200 POSITION.
4. CALIBRATE SWITCH SHOWN IN CAL POSITION.
5. SENSITIVITY SWITCH SHOWN PUSHED IN.
6. ▽ THIS SYMBOL INDICATES CIRCUIT BOARD COMMON.
7. ⏚ THIS SYMBOL INDICATES CHASSIS GROUND.
8. □ THIS SYMBOL INDICATES AN EXTERNAL CONNECTION TO THE CIRCUIT BOARD.
9. ⊗ THIS SYMBOL INDICATES A FERRITE BEAD.

SCHEMATIC OF THE HEATHKIT®

RF POWER METER MODEL HM-102

REPLACEMENT PARTS PRICE LIST

The following prices apply only on purchases from the Heath Company when shipment is to a U.S.A. destination. Add 10% (minimum 25 cents) to the price when ordering from an authorized Service Center or Heathkit Center to cover local sales tax, postage, and handling. Outside the U.S.A., parts and service are available from your local Heathkit source and will reflect additional transportation, taxes, duties, and rates of exchange.

To order a replacement part, use the Parts Order Form furnished with this kit. If a Parts Order Form is not available, refer to "Replacement Parts" inside the rear cover of the Manual.

RESISTORS

1/2-Watt, 5%

PART No.	PRICE Each	DESCRIPTION
1-157	.15	470 Ω
1-122	.15	3300 Ω
1-58	.15	22 kΩ
1-159	.15	82 kΩ
1-104	.15	100 kΩ

Other Resistors

PART No.	PRICE Each	DESCRIPTION
1-16-1	.15	68 Ω, 1-watt, 10%
2-41	1.00	90 kΩ, 1/2-watt, precision

CAPACITORS

PART No.	PRICE Each	DESCRIPTION
20-148	.30	100 pF mica
21-181	.40	7.7 pF ceramic
21-11	.15	150 pF ceramic
21-140	.15	.001 μF ceramic
21-27	.15	.005 μF ceramic
31-57	1.05	2.7-20 pF trimmer

CONTROLS

PART No.	PRICE Each	DESCRIPTION
10-325	1.00	50 kΩ
19-153	2.75	200 kΩ with switch

INDUCTORS-DIODE-SWITCHES

PART No.	PRICE Each	DESCRIPTION
40-1011	1.80	Toroid coil
56-20	.40	1N295 diode
60-53	.40	Slide switch
63-47	1.40	3-position rotary switch

HARDWARE

#4 Hardware

PART No.	PRICE Each	DESCRIPTION
250-213	.05	4-40 x 5/16" screw
252-15	.05	4-40 nut
254-9	.05	#4 lockwasher

#6 Hardware

PART No.	PRICE Each	DESCRIPTION
250-170	.05	#6 x 1/4" sheet metal screw
250-369	.05	#6 x 1/4" black sheet metal screw

#6 Hardware (cont'd.)

PART No.	PRICE Each	DESCRIPTION
250-56	.05	6-32 x 1/4" binder head screw
250-162	.05	6-32 x 1/2" binder head screw
252-3	.05	6-32 nut
253-89	.05	D-washer
254-1	.05	#6 lockwasher
259-1	.05	#6 solder lug

Other Hardware

PART No.	PRICE Each	DESCRIPTION
250-43	.05	8-32 x 1/4" setscrew
252-7	.05	Control nut
253-10	.05	Control flat washer
254-35	.20	Control lockwasher
255-30	.15	Control spacer
255-71	.35	6-32 x 3/4" threaded spacer
257-12	.05	Eyelet

METAL PARTS

PART No.	PRICE Each	DESCRIPTION
90-503-1	1.80	Cabinet top
90-504-1	1.65	Cabinet chassis
214-116	2.10	Remote chassis cover
214-115-2	1.35	Remote chassis
205-778	.15	1/8" x 3/4" alignment tool blade

MISCELLANEOUS

PART No.	PRICE Each	DESCRIPTION
75-30	.15	Strain relief
75-93	.15	1" square insulator paper
85-1443-1	2.05	Circuit board
207-5	.15	Cable clamp
261-9	.05	Rubber foot
407-155	21.30	Meter
436-5	.85	SO-239 connector
462-191	1.25	Skirted knob
490-5	.15	Nut starter
475-10	.15	Ferrite bead
340-3	.05/ft	Bare wire
346-21	.35/ft	Teflon sleeving
347-39	.15/ft	5-conductor cable
331-6	.25	Solder
	2.00	Assembly Manual (See front cover for part number.)

CUSTOMER SERVICE

REPLACEMENT PARTS

Please provide complete information when you request replacements from either the factory or Heath Electronic Centers. Be certain to include the **HEATH** part number exactly as it appears in the parts list.

ORDERING FROM THE FACTORY

Print all of the information requested on the parts order form furnished with this product and mail it to Heath. For telephone orders (parts only) dial 616 982-3571. If you are unable to locate an order form, write us a letter or card including:

- Heath part number.
- Model number.
- Date of purchase.
- Location purchased or invoice number.
- Nature of the defect.
- Your payment or authorization for COD shipment of parts not covered by warranty.

Mail letters to: Heath Company
Benton Harbor
MI 49022
Attn: Parts Replacement

Retain original parts until you receive replacements. Parts that should be returned to the factory will be listed on your packing slip.

OBTAINING REPLACEMENTS FROM HEATH ELECTRONIC CENTERS

For your convenience, "over the counter" replacement parts are available from the Heath Electronic Centers listed in your catalog. Be sure to bring in the original part and purchase invoice when you request a warranty replacement from a Heath Electronic Center.

TECHNICAL CONSULTATION

Need help with your kit? — Self-Service? — Construction? — Operation? — Call or write for assistance. you'll find our Technical Consultants eager to help with just about any technical problem except "customizing" for unique applications.

The effectiveness of our consultation service depends on the information you furnish. Be sure to tell us:

- The Model number and Series number from the blue and white label.
- The date of purchase.
- An exact description of the difficulty.
- Everything you have done in attempting to correct the problem.

Also include switch positions, connections to other units, operating procedures, voltage readings, and any other information you think might be helpful.

Please do not send parts for testing, unless this is specifically requested by our Consultants.

Hints: Telephone traffic is lightest at midweek — please be sure your Manual and notes are on hand when you call.

Heathkit Electronic Center facilities are also available for telephone or "walk-in" personal assistance.

REPAIR SERVICE

Service facilities are available, if they are needed, to repair your completed kit. (Kits that have been modified, soldered with paste flux or acid core solder, cannot be accepted for repair.)

If it is convenient, personally deliver your kit to a Heathkit Electronic Center. For warranty parts replacement, supply a copy of the invoice or sales slip.

If you prefer to ship your kit to the factory, attach a letter containing the following information directly to the unit:

- Your name and address.
- Date of purchase and invoice number.
- Copies of all correspondence relevant to the service of the kit.
- A brief description of the difficulty.
- Authorization to return your kit COD for the service and shipping charges. (This will reduce the possibility of delay.)

Check the equipment to see that all screws and parts are secured. (Do not include any wooden cabinets or color television picture tubes, as these are easily damaged in shipment. Do not include the kit Manual.) Place the equipment in a strong carton with at least THREE INCHES of *resilient* packing material (shredded paper, excelsior, etc.) on all sides. Use additional packing material where there are protrusions (control sticks, large knobs, etc.). If the unit weighs over 15 lbs., place this carton in another one with 3/4" of packing material between the two.

Seal the carton with reinforced gummed tape, tie it with a strong cord, and mark it "Fragile" on at least two sides. Remember, the carrier will not accept liability for shipping damage if the unit is insufficiently packed. Ship by prepaid express, United Parcel Service, or insured Parcel Post to:

Heath Company
Service Department
Benton Harbor, Michigan 49022

HEATH

Schlumberger

HEATH COMPANY • BENTON HARBOR, MICHIGAN

THE WORLD'S FINEST ELECTRONIC EQUIPMENT IN KIT FORM

LITHO IN U.S.A.