Assembly

and

Operation

of the

80-METER SSB TRANSCEIVER

MODEL HW-12

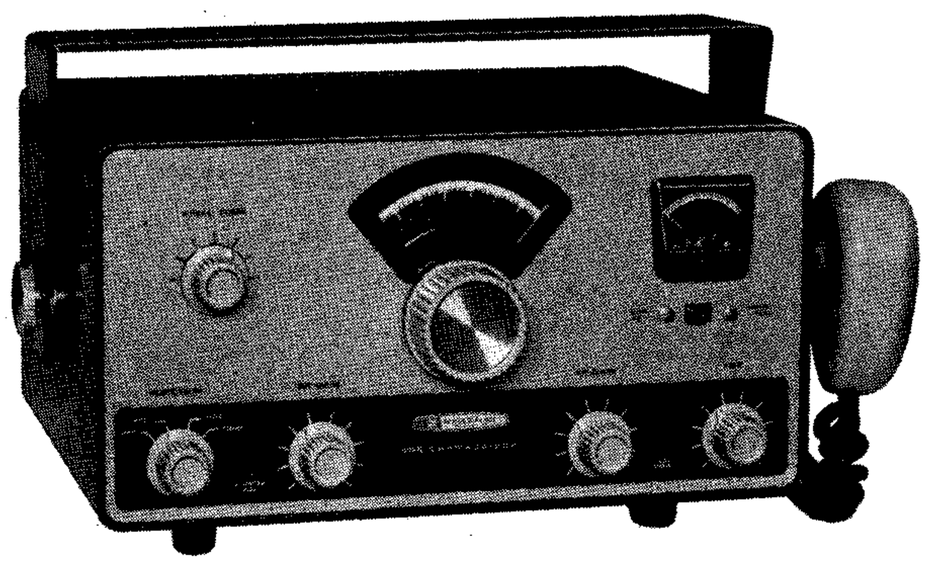

HEATH COMPANY,
BENTON HARBOR,
MICHIGAN

Copyright 1963
Heath Company

11/8/63

TABLE OF CONTENTS

Specifications. 2

Introduction. 4

General Circuit Description. 5

Construction Notes. 6

Parts List. 7

Proper Soldering Techniques. 9

Circuit Board Wiring And Soldering. . . . 11

Step-By-Step Procedure. 12

Step-By-Step Assembly -
- Circuit Board Assembly. 13
- Parts Mounting - Chassis. 22
- Chassis Wiring - Bottom. 24
- Cable Assembly Wiring. 26
- Chassis Top - Wiring. 34

Initial Test. 35

Resistance Chart. 35

Power Supply.. 37

Alignment And Adjustment. 40

Final Assembly. 43

Installation. 45

Operation. 49

In Case Of Difficulty. 50

Circuit Board X-Ray Views. 54

Troubleshooting Chart. 56

Circuit Description. 57

Service Information -
- Service. 62
- Replacements. 63
- Shipping Instructions. 63

Schematic. . . .(fold-out from page). 63

Warranty. 64

BLOCK DIAGRAM

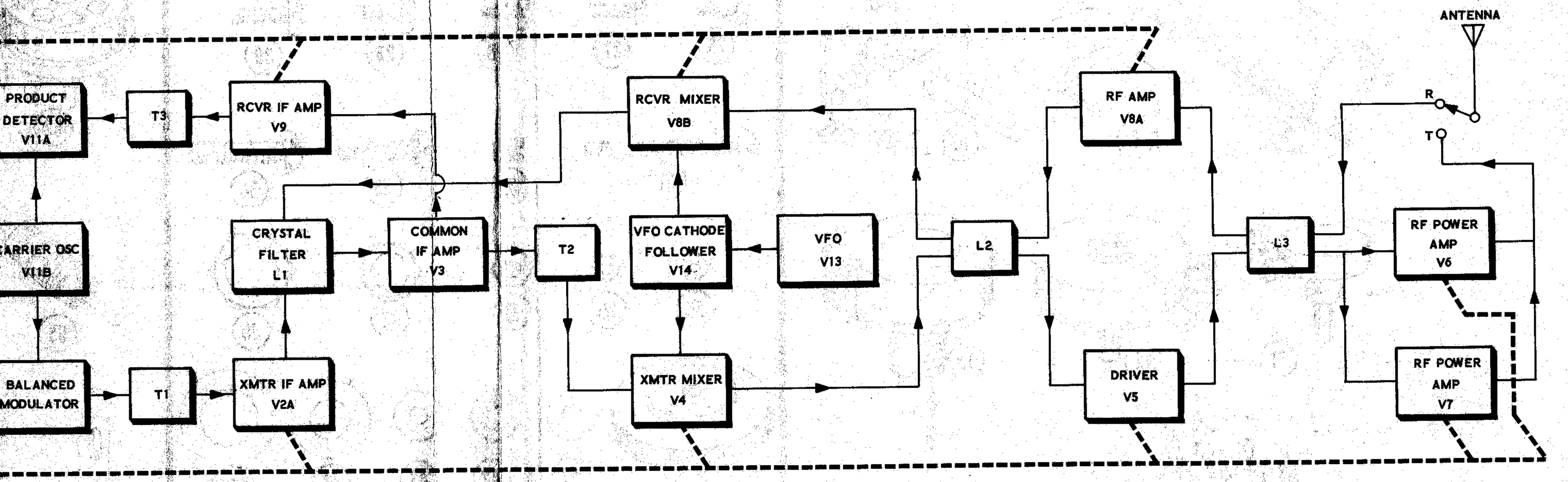

CONTROLS

Front Panel	VFO tune. FINAL TUNE. Meter switch. FUNCTION. S METER ADJ. RF GAIN. AF GAIN (with pull-out switch for accessory crystal calibrator). VOX DELAY. VOX.
Circuit Board	CARRIER NULL.
Chassis Rear	MIC GAIN. TUNE LEVEL. FINAL BIAS.

GENERAL

	12.6 V, AC or DC Filament	800 V DC B+	250 V DC B+	-130 V DC Bias
Power Requirements - Transmit	3.75 amp	250 ma peak	100 ma	5 ma
Receive	3.75 amp	-0-	65 ma	5 ma
Crystal Calibrator (Accessory)	.3 amp	-0-	2 ma	-0-

Tube Complement	3 - 6EA8: Microphone amplifier and AF cathode follower - Transmitter IF amplifier and relay amplifier - RF amplifier and receiver mixer. 5 - 6AU6: VFO - VOX amplifier - IF amplifiers (2) - Transmitter mixer. 1 - 6BE6: VFO cathode follower. 1 - 12BY7: Transmitter driver. 1 - 12AT7: Product detector and carrier oscillator. 1 - 6EB8: AF amplifier and AF output. 2 - 6GE5: Transmitter RF output
Cabinet Dimensions	6-1/4" high x 12-1/4" wide x 10" deep. Add 1" to height, width, and depth for gimbal bracket, knobs, and connecting plugs.
Net Weight	12 lbs.
Shipping Weight	15 lbs.

Equipment Used To Prepare Specifications.	Heath IM-11 VTVM with 309-C RF Probe. Heath HO-10 Monitorscope. Heath IG-72 Audio Generator. Heath IM-12 Distortion Meter. Heath HN-31 Cantenna. Panoramic Radio Products, Inc. "Panalyzer," Model SB-12A. General Radio Co., Signal Generator, Model 1001-A. Tektronix Oscilloscope, Model 515A. Esterline Chart Recorder, Model AW. Boonton RF Voltmeter, Model 91-CA.
Equipment Used To Check And Calibrate.	VTVM and RF Probe. Frequency standard. Crystal calibrated receiver, covering the 80-meter band, or an accurate broadcast receiver.

All prices are subject to change without notice. The Heath Company reserves the right to discontinue instruments and to change specifications at any time without incurring any obligation to incorporate new features in instruments previously sold.

INTRODUCTION

NOTE: An Amateur Radio License that provides General Class privileges is required to operate this Transceiver on the air.

The Heathkit Model HW-12 Amateur Transceiver is an 80-meter SSB (single-sideband) transmitter and receiver designed for both mobile and fixed station use.

The receiver and transmitter are locked together with the continuously running VFO to insure that both sections operate at the same frequency. The low frequency VFO is temperature compensated to provide stable operation.

Provisions have been made for PTT (push-to-talk) operation. A VOX (voice operated transmitter) circuit is designed into the Transceiver. Other features include ALC (automatic level control) to prevent the transmitter from overloading, and AVC (automatic volume control) to maintain constant receiver output over a wide range of input signal strength.

An accessory socket is wired into the circuit for the Heathkit Model HRA-10-1 Crystal Calibrator to provide accurate frequency checks at 100 kc intervals. A connection on the rear of the Transceiver for switching an external relay makes the Transceiver easily useable with a linear amplifier. Power for the Transceiver can be obtained from the Heathkit Model HP-13 (12 VDC) or Model HP-23 (120 VAC) Power Supply. Equivalent power supplies can be used.

GENERAL CIRCUIT DESCRIPTION

This brief circuit description is intended only to familiarize you with the Transceiver. We suggest that you read this information before proceeding with assembly. A more detailed circuit description can be found on Page 57. You may want to study the detailed circuit description as time allows after assembly is completed.

When reading this circuit description, it may be helpful to follow the circuit on the Block Diagram. In the Block Diagram, the receiver stages are located across the top, the transmitter stages across the bottom, and stages common to both the receiver and transmitter are located through the center.

TRANSMITTER OPERATION

There are two ways to actuate the Transceiver relay to change from receive to transmit operation; first, by the PTT (push-to-talk) method where a pushbutton switch in the microphone is used to close the relay circuit; or second, by the VOX (voice operated transmitter) method.

In VOX operation, the voice sounds which are transformed into electrical impulses by the microphone are amplified by microphone amplifier stage V1A. These signals go to VOX amplifier V10 and to AF (audio frequency) cathode follower V1B. These electrical impulses are amplified by the VOX amplifier and then by relay amplifier V2B to a level that will operate the relay. When the relay is switched to the transmit position, it turns off certain tubes in the receiver sections and turns on certain tubes in the transmitter sections, as indicated by the dashed lines on the Block Diagram. The tubes in both sections that are not switched by the relay remain in operation for both transmitting and receiving.

With the transmitter switched on by either the PTT or VOX method, the amplified voice voltage from V1A is sent to AF cathode follower V1B, which properly matches the low impedance of the diode type balanced modulator. The balanced modulator mixes the voice frequencies with a signal from carrier oscillator stage V11B. The modulator uses these two signals to develop two new signals; one is the sum of these two signals, and the other is the difference between these two signals. With the modulator balanced, the carrier signal is cancelled out and the resulting output of the modulator is a "double sideband, suppressed carrier" signal at the carrier frequency (IF).

The output of the modulator is fed through transformer T1, which is tuned to aid in balancing the modulator. From T1, the signals are amplified by transmitter IF amplifier V2A. From V2A, the amplified signals go to the crystal filter, which passes only the lower sideband signal and rejects the upper sideband signal. The lower sideband signal from the crystal filter is amplified by IF amplifier V3. This signal then passes through IF transformer T2 to transmitter mixer stage V4. In the mixer, the signal is combined with a signal from VFO (variable frequency oscillator) cathode follower stage V14. This mixing results in a single sideband signal at the correct transmitter output frequency.

The VFO signal is produced by tunable oscillator stage V13. The VFO signal from V13 goes to VFO cathode follower V14 for isolation. This signal is used in the mixer stages of both the receiver and transmitter, thus locking the transmitter and receiver to the same operating frequency.

The signal from transmitter mixer stage V4 is fed through receiver-transmitter bandpass coil L2, and then is amplified by RF driver V5. Output signal from the driver is applied through bandpass coil L3 to RF power amplifier tubes V6 and V7. Here the power level is greatly increased and then is fed to the antenna through a section of the relay.

To obtain maximum transmitter output without overloading, a portion of the driver output signal is fed back to preceding stages to adjust their gain automatically as needed. This is called ALC (automatic level control).

RECEIVER OPERATION

For receiving, the antenna is connected through the relay to receive-transmit bandpass coil L3. From coil L3, the signal is applied to RF amplifier stage V8A. From V8A, the signal passes

through receive-transmit bandpass coil L2 to receiver mixer stage V8B. In V8B, the incoming signal is mixed with the VFO signal from V14 to produce the IF signal. The IF signal from V8B passes through the crystal filter, receive-transmit IF amplifier V3, and then to receiver IF amplifier V9. The crystal filter passes only the IF signal and rejects all others.

Amplified signal from V9 is fed through IF transformer T3 to product detector V11A. In the product detector, the incoming signal is mixed with a signal from the carrier oscillator to produce an output signal that contains only the received voice frequencies.

The voice frequency signal is amplified by AF amplifier V12B. A portion of this amplified signal is used to obtain a control voltage which is fed back to some of the preceding stages to maintain the volume at a constant level over a wide range of received signal strength. This is called AVC (automatic volume control). Finally, the voice signal is amplified by AF output amplifier V12A and is then applied to the speaker output of the Transceiver.

To keep the speaker output from tripping the transmitter VOX stages, a portion of the receiver output signal is fed to an anti-trip circuit to keep the relay from switching to transmit operation.

POWER SUPPLY

Operating voltages for the Transceiver are obtained from a separate power supply. The voltage and current values required are listed in the Specifications section of the manual.

CONSTRUCTION NOTES

This manual is supplied to assist you in every way to complete your kit with the least possible chance for error. The arrangement shown is the result of extensive experimentation and trial. If followed carefully, the result will be highly stable and dependable performance. We suggest that you retain the manual in your files for future reference, both in the use of the equipment and for its maintenance.

UNPACK THE KIT CAREFULLY AND CHECK EACH PART AGAINST THE PARTS LIST. In so doing, you will become acquainted with the parts. Refer to the information on the inside covers of the manual to help you identify the components. If some shortage or parts damage is found in checking the Parts List, please read the Replacements section and supply the information called for therein. Include all inspection slips in your letter to us.

Resistors generally have a tolerance rating of 10% unless otherwise stated in the Parts List. Tolerances on capacitors are generally even greater. Limits of +100% and -20% are common for electrolytic capacitors.

We suggest that you do the following before work is started:

1. Lay out all parts so that they are readily available.
2. Provide yourself with good quality tools. Basic tool requirements consist of a screwdriver with a 1/4" blade; a small screwdriver with a 1/8" blade; long-nose pliers; wire cutters, preferably separate diagonal cutters; wire strippers or a penknife for stripping insulation from wires; a soldering iron and rosin core solder. A set of nut drivers and a nut starter, while not necessary, will aid extensively in construction of the kit.

Most kit builders find it helpful to separate the various parts into convenient categories. Muffin tins or molded egg cartons make convenient trays for small parts. Resistors and capacitors may be placed with their lead ends inserted in the edge of a piece of corrugated cardboard until they are needed. Values can be written on the cardboard next to each component. The illustration shows one method that may be used.

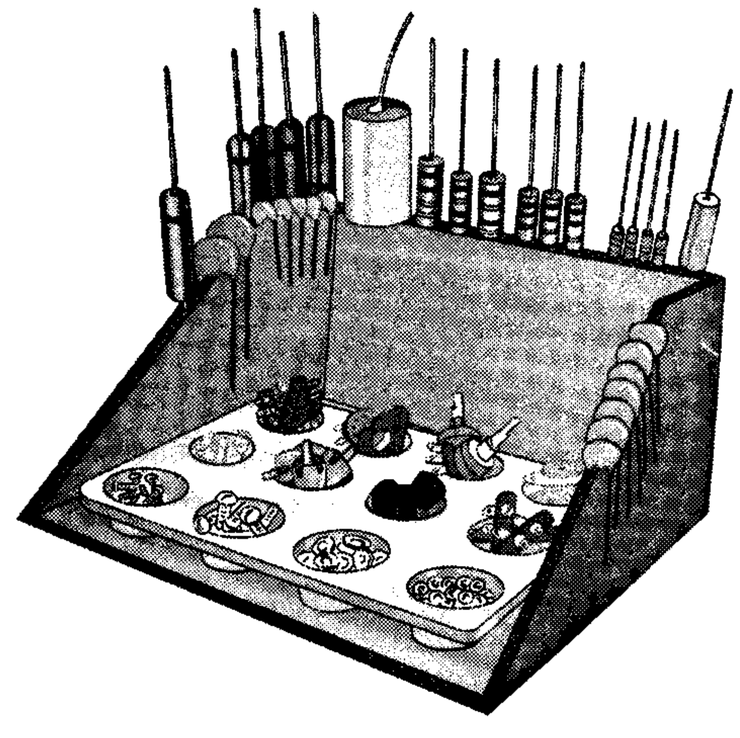

PARTS LIST

The numbers in the parentheses in the Parts List are keyed to the numbers on the Parts Pictorial to aid in parts identification.

PART No.	PARTS Per Kit	DESCRIPTION
Resistors		
(1) 1-1	1	47 Ω 1/2 watt (yellow-violet-black)
1-3	4	100 Ω 1/2 watt (brown-black-brown)
1-66	1	150 Ω 1/2 watt (brown-green-brown)
1-45	6	220 Ω 1/2 watt (red-red-brown)
1-4	1	330 Ω 1/2 watt (orange-orange-brown)
1-9	9	1000 Ω 1/2 watt (brown-black-red)
1-14	2	3300 Ω 1/2 watt (orange-orange-red)
1-16	6	4700 Ω 1/2 watt (yellow-violet-red)
1-19	3	6800 Ω 1/2 watt (blue-gray-red)
1-20	7	10 KΩ 1/2 watt (brown-black-orange)

PART No.	PARTS Per Kit	DESCRIPTION
Resistors (cont'd.)		
1-22	5	22 KΩ 1/2 watt (red-red-orange)
1-25	13	47 KΩ 1/2 watt (yellow-violet-orange)
1-26	13	100 KΩ 1/2 watt (brown-black-yellow)
1-29	7	220 KΩ 1/2 watt (red-red-yellow)
1-35	13	1 megohm 1/2 watt (brown-black-green)
1-38	1	3.3 megohm 1/2 watt (orange-orange-green)
1-70	1	22 megohm 1/2 watt (red-red-blue)
(2) 3B-2	1	.33 Ω 2 watt (orange-orange-silver-gold)
(3) 1B-21	1	20 Ω 2 watt (red-black-black)
1B-22	2	12 KΩ 2 watt (brown-red-orange)

PART No.	PARTS Per Kit	DESCRIPTION
Capacitors		
(4) 20-30	2	22 μμf mica
(5) 20-96	2	36 μμf mica
20-102	2	100 μμf mica
20-112	2	310 μμf mica
20-131	1	360 μμf mica
20-122	3	1000 μμf mica
20-127	2	1300 μμf mica
(6) 21-60	6	18 μμf disc
21-32	6	47 μμf disc
21-49	2	68 μμf disc
21-13	6	500 μμf disc
21-57	25	.005 μfd 500 V disc
21-35	3	.005 μfd 1.6 KV disc
21-31	29	.02 μfd disc
21-95	5	0.1 μfd disc
(7) 25-54	2	10 μfd tubular electrolytic
(8) 25-135	1	20 μfd electrolytic
(9) 27-26	1	.03 μfd Mylar* (polyester film)
27-34	1	.2 μfd Mylar*
27-20	2	.4 μfd Mylar*
(10) 26-28	1	100 μμf variable
26-35	1	50 μμf variable
Controls-Switches-Relay		
(11) 10-130	1	200 Ω miniature control
(12) 10-57	2	10 KΩ tab-mount control
10-58	1	100 KΩ tab-mount control
10-127	2	1 megohm tab-mount control
(13) 10-131	1	10 KΩ control
10-67	1	1 megohm control
19-66	1	500 KΩ control with pull switch
(14) 60-2	1	DPDT slide switch
63-330	1	4-position rotary with snap switch
69-34	1	Relay
Coils-Chokes-Transformers		
(15) 40-509	1	Crystal filter coil
40-510	1	Power amplifier coil
40-513	1	Driver plate coil
40-516	1	Driver grid coil
(16) 45-51	1	15 μh RF choke
(17) 45-58	1	13 μh RF choke
(18) 45-3	1	1 mh RF choke
(19) 45-4	1	1.1 mh RF choke
(20) 45-47	1	2 mh RF choke

* Du Pont Registered Trademark

PART No.	PARTS Per Kit	DESCRIPTION
Coils-Chokes-Transformers (cont'd.)		
51-55	1	Audio output transformer
52-25	1	VFO coil
52-63	3	2.305 mc IF transformer
Diode-Crystals-Tubes-Lamps		
(21) 56-M4	5	Crystal diode (red-green-violet)
(22) 57-27	4	Silicon diode
404-203		Crystal set consisting of:
(23) 404-191	2	Filter crystal
404-192	2	Filter crystal
404-197	1	Oscillator crystal
411-11	5	6AU6 tube
411-91	1	6BE6 tube
411-124	3	6EA8 tube
411-161	1	6EB8 tube
411-185	2	6GE5 tube
411-24	1	12AT7 tube
411-69	1	12BY7 tube
(24) 412-1	2	47 pilot lamp
(25) 412-11	1	Neon lamp
Hardware		
(26) 250-49	4	3-48 x 1/4" screw (in bag)
(27) 250-213	26	4-40 x 5/16" screw
(28) 250-170	8	#6 sheet metal screw
(29) 250-56	17	6-32 x 1/4" screw
(30) 250-89	4	6-32 x 3/8" screw
(31) 250-13	6	6-32 x 1" screw
(32) 250-16	1	8-32 x 3/16" setscrew
(33) 250-83	8	#10 x 1/2" sheet metal screw
(34) 250-54	2	10-32 x 5/8" screw
(35) 252-1	4	3-48 nut (in bag)
(36) 252-15	20	4-40 nut
(37) 252-3	20	6-32 nut
(38) 252-39	1	1/4" nut
(39) 252-7	5	Control nut
(40) 252-49	2	10-32 thumbnut
(41) 253-1	2	#6 fiber flat washer
(42) 253-2	2	#6 fiber shoulder washer
(43) 253-9	6	#8 flat metal washer
(44) 253-39	1	1/4" flat washer
(45) 253-10	4	Control flat washer
(46) 254-7	4	#3 lockwasher (in bag)
(47) 254-9	24	#4 lockwasher

	PART No.	PARTS Per Kit	DESCRIPTION
	Hardware (cont'd.)		
(48)	254-1	27	#6 lockwasher
(49)	254-3	2	#10 lockwasher
(50)	254-14	1	1/4" lockwasher
(51)	254-5	2	Control lockwasher
(52)	255-5	4	#6 x 3/4" spacer
(53)	255-44	2	10-32 shoulder spacer
(54)	259-1	5	#6 solder lug
(55)	259-10	4	Control solder lug
(56)	259-20	45	Solder terminal
(57)	260-7	1	Transformer mounting clip
(58)	435-1	1	Octal socket ring
	Cable Assembly-Shielded Cable-Wire Sleeving		
	134-83	1	Cable assembly
	343-7	1	Single-conductor shielded cable
	347-3	1	Double-conductor shielded cable
	344-1	1	Hookup wire
	346-1	1	Sleeving
	Connectors-Sockets-Plugs		
(59)	432-38	1	Male microphone connector
(60)	432-39	1	Female microphone connector
(61)	434-112	6	7-pin tube socket
	434-79	6	9-pin tube socket
	434-140	2	12-pin tube socket
(62)	434-105	1	8-pin tube socket
(63)	434-4	2	Octal socket
(64)	434-42	4	Phono socket
	434-44	2	Pilot lamp socket
(65)	438-25	4	Phono plug
	438-6	1	Octal plug

	PART No.	PARTS Per Kit	DESCRIPTION
	Knobs		
	462-106	1	Small knob
	462-122	5	Pointer knob
	462-189	1	Large knob
	Metal Parts		
	90-265	1	Cabinet
(66)	100-M43	1	Dial plate
	100-M442F929	1	Chassis
	100-M455	1	Front panel
(67)	204-M564	2	Angle bracket
(68)	204-M453	1	Pilot lamp mounting bracket
	204-M576F	1	Gimbal bracket
	Miscellaneous		
(69)	73-1	4	Rubber grommet
	85-69F921P1	1	Circuit board
	261-4	4	Small rubber feet
	261-9	2	Medium rubber feet
	261-21	2	Large rubber feet
	407-99	1	Meter
(70)	440-1	2	Octal plug cap
	489-1	1	Sandpaper
	464-M29F924	1	Plastic dial
	490-1	1	Alignment tool
	331-6		Solder
	595-631	1	Manual

PROPER SOLDERING TECHNIQUES

Only a small percentage of customers find it necessary to return equipment for factory service. By far the largest portion of malfunctions in this equipment are due to poor or improper soldering.

If terminals are bright and clean and free of wax, frayed insulation and other foreign substances, no difficulty will be experienced in soldering. Correctly soldered connections are essential if the performance engineered into a kit is to be fully realized. If you are a beginner with no experience in soldering, a half hour's practice with some odd lengths of wire may be a worthwhile investment.

For most wiring, a 25 to 100 watt iron or its equivalent in a soldering gun is very satisfactory. A lower wattage iron than this may not heat the connection enough to flow the solder smoothly. Keep the iron tip clean by wiping it from time to time with a cloth.

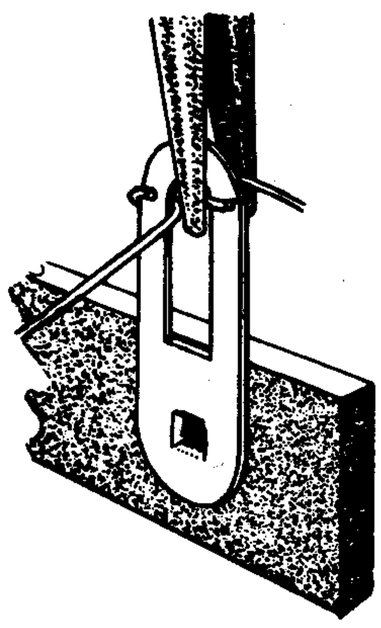

CRIMP WIRES

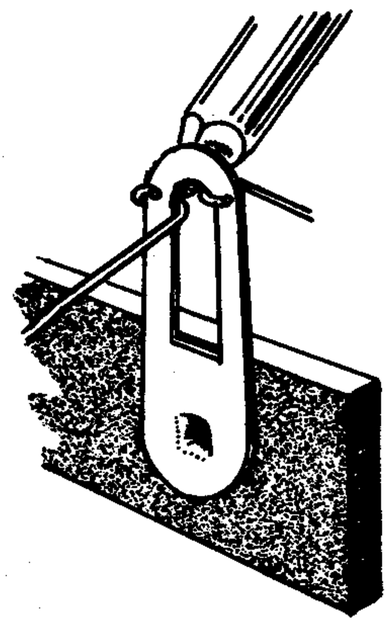

HEAT CONNECTION

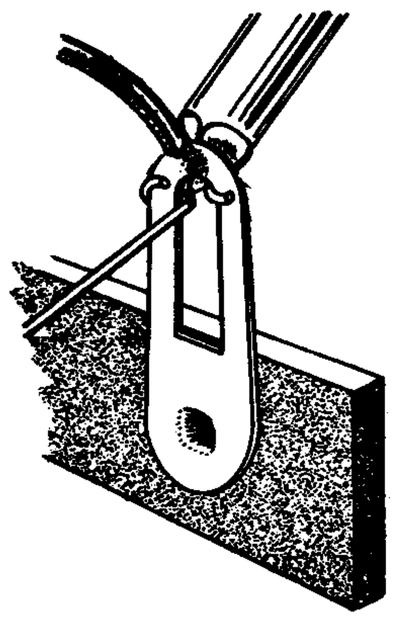

APPLY SOLDER

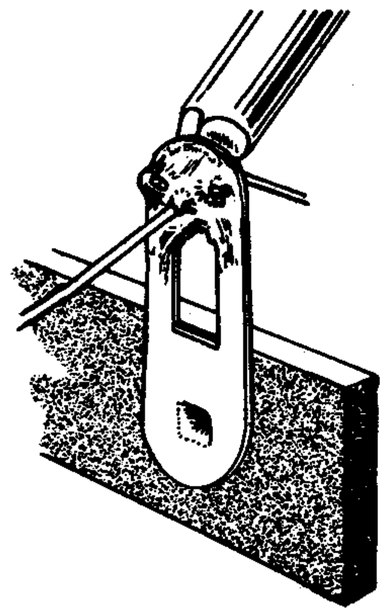

ALLOW SOLDER TO FLOW

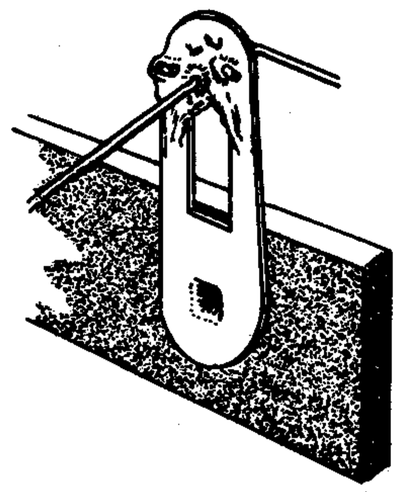

PROPER SOLDER CONNECTION

CHASSIS WIRING AND SOLDERING

1. All wire used is the type with colored insulation (hookup wire). In preparing a length of hookup wire, 1/4" of insulation should be removed from each end unless directed otherwise in the assembly step.

2. Leads on resistors, capacitors, and similar components are generally much longer than need be to make the required connections. In these cases, the leads should be cut to proper length before the part is installed. In general, the leads should be just long enough to reach their terminating points.

3. Crimp or bend the wire around the terminal just enough to hold it in place until it is soldered. Do not knot or twist the wire around the lug.

4. Position the work, if possible, so that gravity will help to keep the solder where you want it.

5. Place a flat side of the soldering iron tip against the joint to be soldered until it is heated sufficiently to melt the solder.

6. Then place the solder and it will immediately flow over the joint; use only enough solder to thoroughly wet the junction. It is usually not necessary to fill the entire hole in the terminal with solder.

7. Remove the solder and then the iron from the completed joint. Use care not to move the leads until the solder is solidified.

A poor or cold solder joint will usually look crystalline and have a grainy texture, or the solder will stand up in a blob and will not have adhered to the joint. Such joints should be reheated until the solder flows smoothly. In some cases, it may be necessary to add a little more solder to achieve a smooth, bright appearance.

ROSIN CORE SOLDER HAS BEEN SUPPLIED WITH THIS KIT. THIS TYPE OF SOLDER MUST BE USED FOR ALL SOLDERING IN THIS KIT. ALL GUARANTEES ARE VOIDED AND WE WILL NOT REPAIR OR SERVICE EQUIPMENT IN WHICH ACID CORE SOLDER OR PASTE FLUXES HAVE BEEN USED. IF ADDITIONAL SOLDER IS NEEDED, BE SURE TO PURCHASE ROSIN CORE (60:40 or 50:50 TIN-LEAD CONTENT) RADIO TYPE SOLDER.

CIRCUIT BOARD WIRING AND SOLDERING

Before attempting any work on the circuit board, read the following instructions carefully and study the Figures. It is only necessary to observe the following basic precautions to insure proper operation of the unit the first time it is turned on.

Proper mounting of components on the board is essential for good performance. A good general rule to follow is that all components on the board should be mounted tightly to the board, unless instructions state otherwise. All leads should be kept as short as possible to minimize the effects of stray capacity in the wiring. Proper and improper methods of mounting are illustrated in the accompanying Figures.

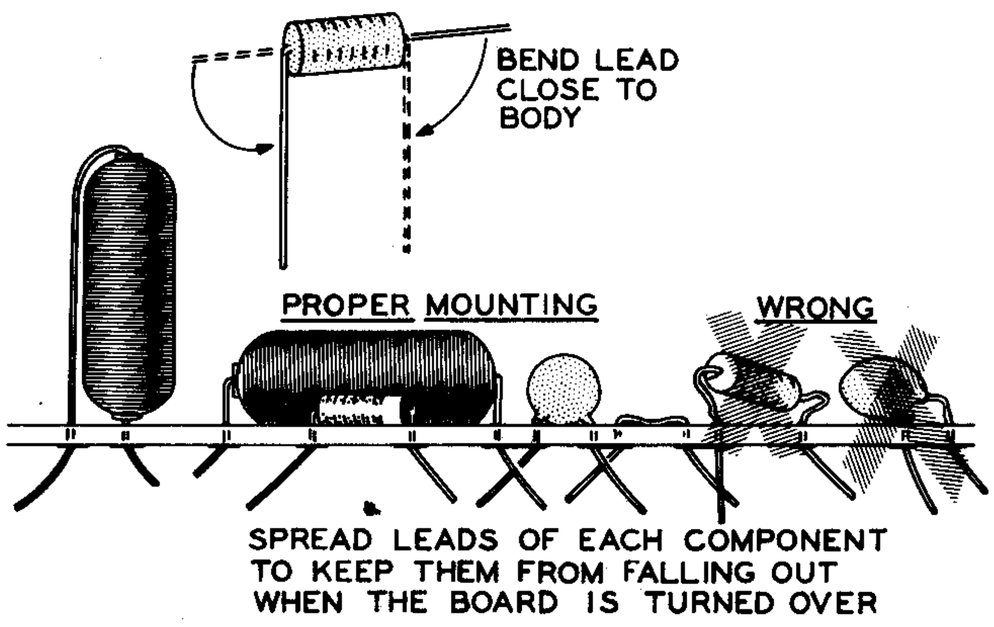

NOTE: Exercise care not to damage resistors or capacitors when bending the leads as shown.

Tubular capacitors and resistors will fit properly if the leads are bent as shown. Disc capacitors will generally fit in place with no lead preparation other than determining that the leads are straight. Components with lugs normally require no preparation unless the lugs appear to be bent, in which case they can be straightened with pliers.

Parts should be inserted as instructed, and the leads bent outward, as illustrated, to lock them in place. When a group of parts has been installed on a circuit board, solder each lead to the foil pattern and clip off the excess wire.

The actual technique of soldering leads to a circuit board is quite simple. Position the tip of the soldering iron so that it firmly contacts both the circuit board foil and the wire or lug

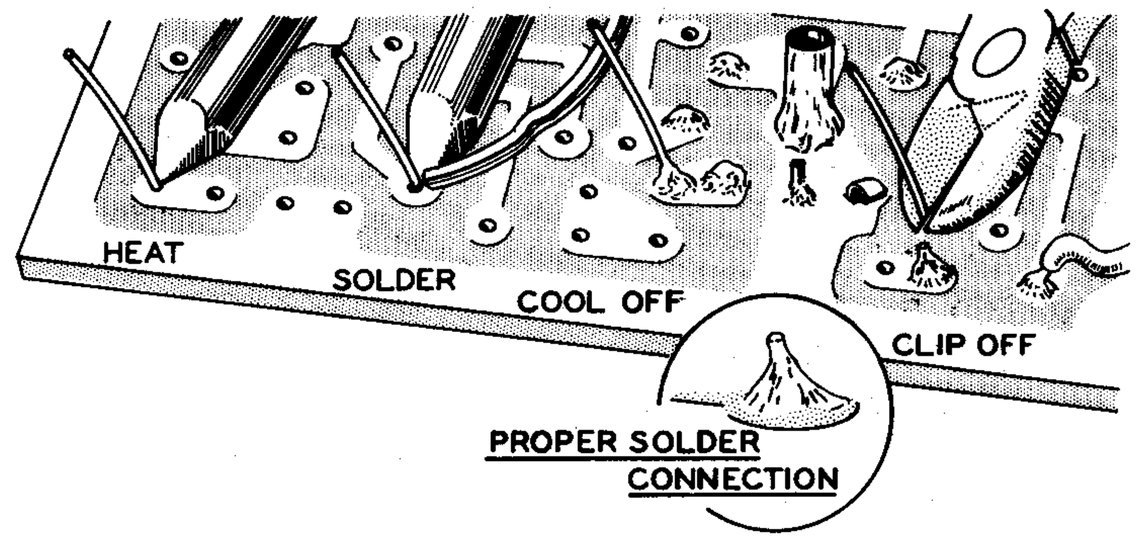

to be soldered, as shown. The iron should be held so that solder is not likely to flow to adjacent foil conductors or connections. The solder should immediately be placed between the iron and the joint to be soldered. Remove the length of solder as soon as its end begins to melt and flow onto the lead and foil. Hold the tip of the iron in place only until the solder begins to flow outward over the foil; then remove the iron quickly.

Avoid overheating the connection. A soldering pencil or small iron (approximately 25 watts) is ideal for use in circuit board work. If only a high wattage iron or soldering gun is available, precautions must be taken to avoid circuit board damage due to overheating and excess solder.

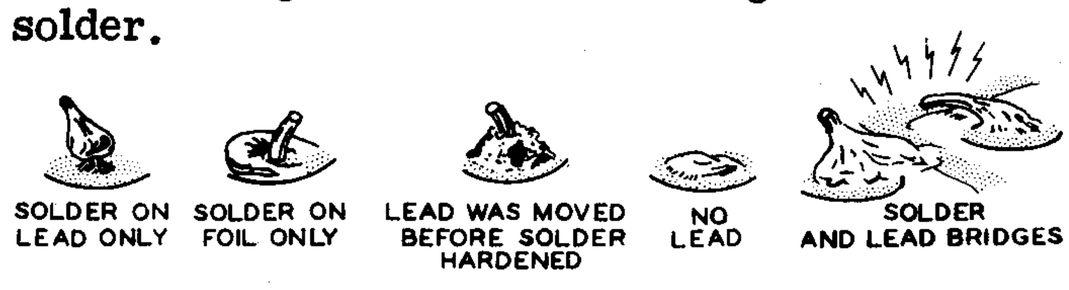

IMPROPER SOLDER CONNECTIONS

The use of excessive amount of solder will increase the possibility of bridging between foil conductors or plugging holes which are to be left open for wires which may be added later on. If solder is accidentally bridged across insulating areas between conductors, it can be cleaned off by heating the connection carefully and quickly wiping or brushing the solder away with a soft cloth or clean brush. Holes which become plugged can be cleared by heating the area immediately over the hole while gently pushing the lead of a resistor through the hole from the opposite side, and withdrawing the lead before the solder rehardens. Do not force the lead through; too much pressure before the solder has time to soften may separate the foil from the board.

STEP-BY-STEP PROCEDURE

The following instructions are presented in a logical step-by-step sequence to enable you to complete your kit with the least possible confusion. Be sure to read each step all the way through before beginning the specified operation. Also read several steps ahead of the actual step being performed. This will familiarize you with the relationship of the subsequent operations. When the step is completed, check it off in the space provided. This is particularly important as it may prevent errors or omissions, especially if your work is interrupted. Some kit builders have also found it helpful to mark each wire and part in colored pencil on the Pictorial as it is added.

ILLUSTRATIONS

The fold-out diagrams in this manual may be removed and attached to the wall above your working area; but because they are an integral part of the instructions, they should be returned to the manual after the kit is completed.

In general, the illustrations in this manual correspond to the actual configuration of the kit; however, in some instances the illustrations may be slightly distorted to facilitate clearly showing all of the parts.

SOLDERING INFORMATION

The abbreviation "NS" indicates that a connection should not be soldered yet as other wires will be added. When the last wire is installed, the terminal should be soldered and the abbreviation "S" is used to indicate this. Note that a number will appear after each solder instruction. This number indicates the number of leads that are supposed to be connected to the terminal in point before it is soldered. For example, if the instruction reads, "Connect a wire to lug 1 (S-2)," it will be understood that there will be two wires connected to the terminal at the time it is soldered. (In cases where a wire passes through a terminal or lug and then connects to another point, it will count as two wires, one entering and one leaving the terminal.)

GENERAL

The steps directing the installation of resistors include color codes to help identify the parts. Also, if a part is identified by a letter-number designation (R1, C1, etc.) on the Schematic, its designation will appear at the beginning of the assembly step which directs its installation. Letter-number designations for parts mounted on the circuit boards can be found by checking the Circuit Board X-Ray Views at the rear of the manual.

STEP-BY-STEP ASSEMBLY

CIRCUIT BOARD ASSEMBLY

Because the circuit board is quite large, it has been divided into small sections to simplify assembly. This will make it easier to identify the points on the circuit board that are referred to throughout the assembly instructions. The sections of the circuit board are similar to those of a road map; the sections are identified by numbers across the top and bottom, and letters down each side of the circuit board. The imaginary dividing lines (see Pictorial 1) run vertically and horizontally between the circuit board mounting holes.

For instance, to locate connector 7 in section 1B, you would first find section 1B of the circuit board and then look for connector 7 in this section. Pictorial 1 shows the circuit board sections.

NOTE: Before circuit board assembly is started, we suggest that you read Circuit Board Wiring and Soldering on Page 11.

Refer to Pictorial 1 for the following steps.

(✓) Place the circuit board in front of you and position it as shown in Pictorial 1.

(✓) Referring to Detail 1A, install 7-pin tube sockets at locations V3, V4, V9, V10, V13, and V14. Solder all 7 pins of each socket.

CAUTION: Be careful not to cover unused holes when soldering.

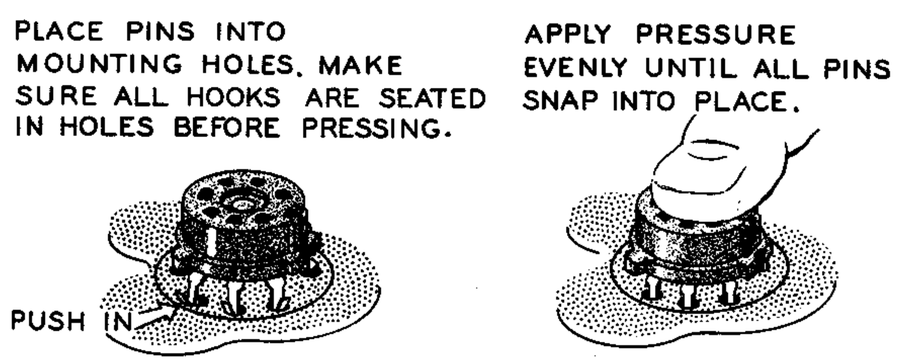

Detail 1A

(✓) In a like manner, install 9-pin tube sockets at locations V1, V2, V5, V8, V11, and V12. Solder all 9 pins of each socket.

(✓) Referring to Detail 1B, remove pins 5 and 6 from one of the 12-pin tube sockets. The pin numbers are molded on the top and bottom of the socket.

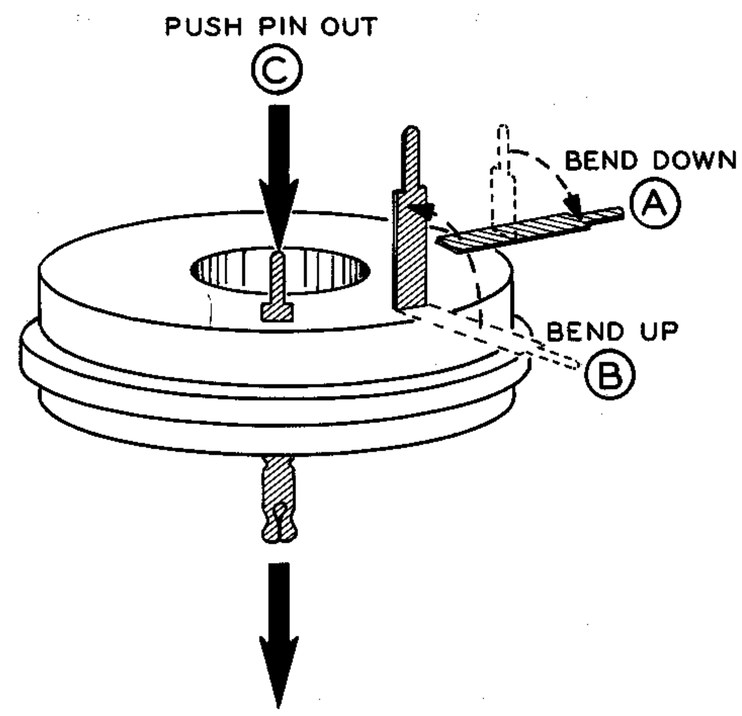

Detail 1B

(✓) Referring to Detail 1C, install the prepared socket at location V6. Align the keyway of the socket with the arrow printed on the circuit board. Solder all 10 pins.

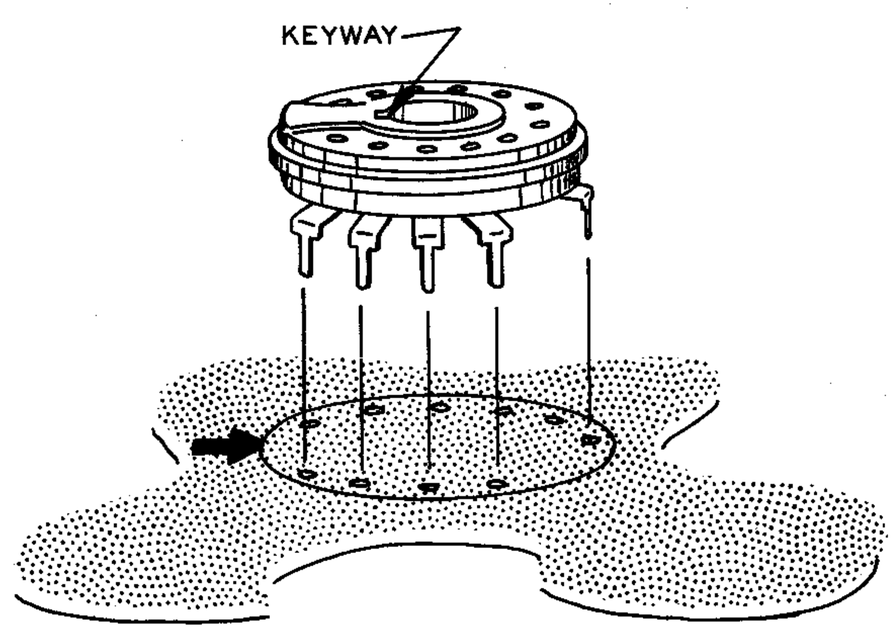

Detail 1C

(✓) In a similar manner, remove pins 8 and 9 from the other 12-pin tube socket.

(✓) Install this socket at location V7. Solder all 10 pins.

( ) Referring to Detail 1D, install the 8-pin tube socket at the Calibrator location. Align the keyway of the socket with the arrow printed on the circuit board and solder all 8 pins.

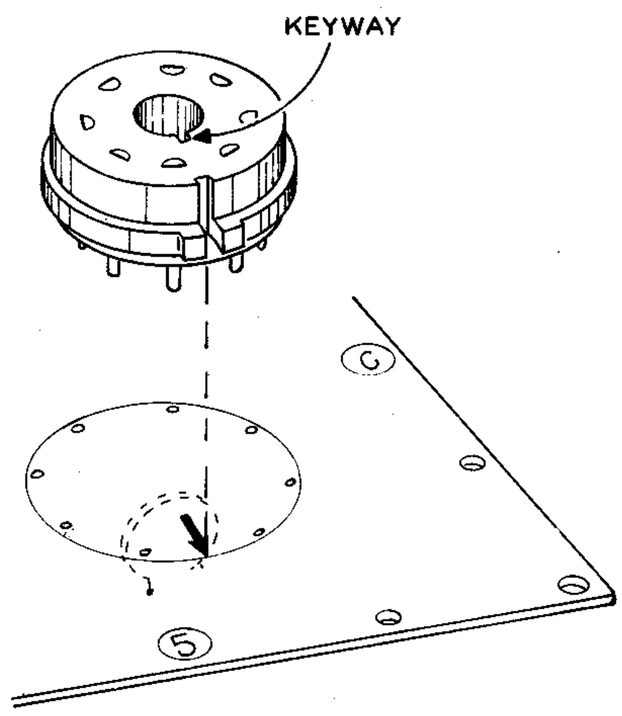

Detail 1D

NOTE: The circuit board can be supported on the chassis when installing and soldering components. This will keep the board level and make it easier to perform the following steps. Soldering to the circuit board foil will be easier if you solder and clip off excess leads after every six or eight components are installed. All resistors are 1/2 watt unless specified otherwise. Resistors will be called out by resistance value and color code only in the circuit board wiring steps.

NOTE: Use hookup wire for all jumper wires. Strip 1/2" insulation from each end of the wires.

Perform the steps on Pictorial 2.

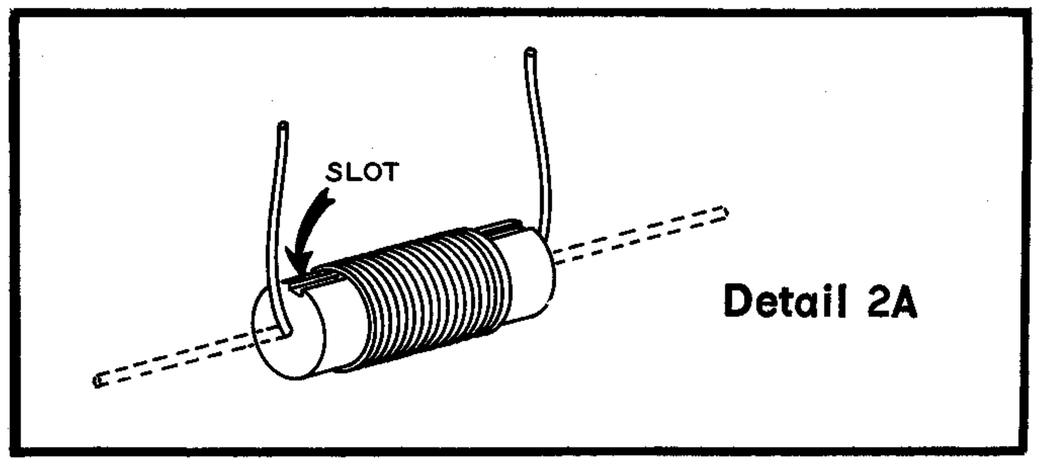

Detail 2A

START

( ) 1-5/8" jumper.

( ) 1300 μμf mica capacitor.

( ) 1000 Ω (brown-black-red).

( ) 310 μμf mica capacitor.

( ) 15 μh (#45-51) choke. See Detail 2A for lead bending.

( ) 4700 Ω (yellow-violet-red).

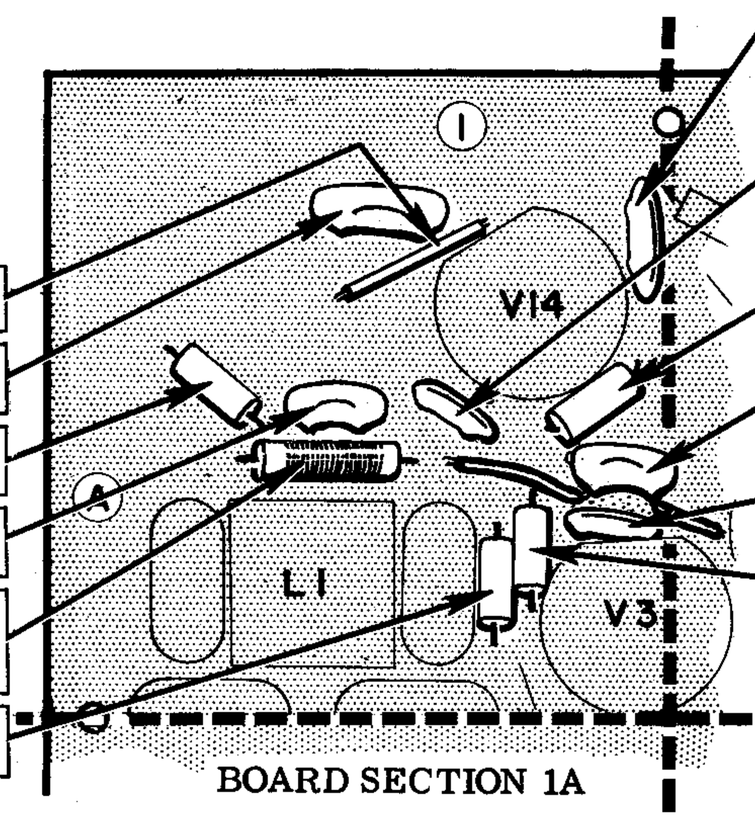

BOARD SECTION 1A

PICTORIAL 2

CONTINUE

( ) .02 μfd disc capacitor.

( ) .005 μfd disc capacitor. NOTE: Do not use the .005 μfd 1.6 KV capacitors until they are called for specifically.

( ) 3300 Ω (orange-orange-red).

( ) 310 μμf mica capacitor. Use sleeving.

( ) .1 μfd disc capacitor.

( ) 220 Ω (red-red-brown).

( ) Check to see that all connections are soldered, and cut off excess leads.

FINISH

PERFORM THE STEPS ON PICTORIAL 3.

START

- ( ) 220 Ω (red-red-brown).
- ( ) .03 μfd Mylar capacitor.
- ( ) .1 μfd disc capacitor.
- ( ) 1 megohm (brown-black-green).
- ( ) 22 megohm (red-red-blue).
- ( ) 47 KΩ (yellow-violet-orange).
- ( ) 12 KΩ 2 watt (brown-red-orange). See Detail 3A. Use sleeving.
- ( ) 4700 Ω (yellow-violet-red).
- ( ) 47 KΩ (yellow-violet-orange).
- ( ) .005 μfd disc capacitor.
- ( ) 100 KΩ (brown-black-yellow).
- ( ) .005 μfd disc capacitor.

NOTE: The banded end of crystal diodes must be positioned as shown.

- ( ) Crystal diode.
- ( ) 220 Ω (red-red-brown).
- ( ) 36 μμf mica capacitor.
- ( ) Crystal diode.
- ( ) 1000 Ω (brown-black-red).
- ( ) .02 μfd disc capacitor.
- ( ) Crystal diode.
- ( ) .4 μfd Mylar capacitor.

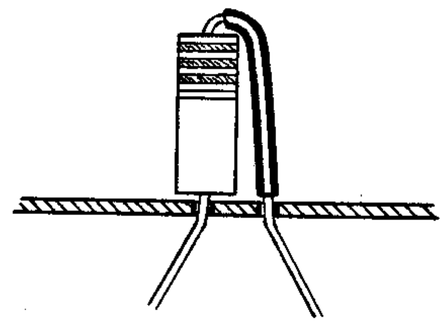

Detail 3A

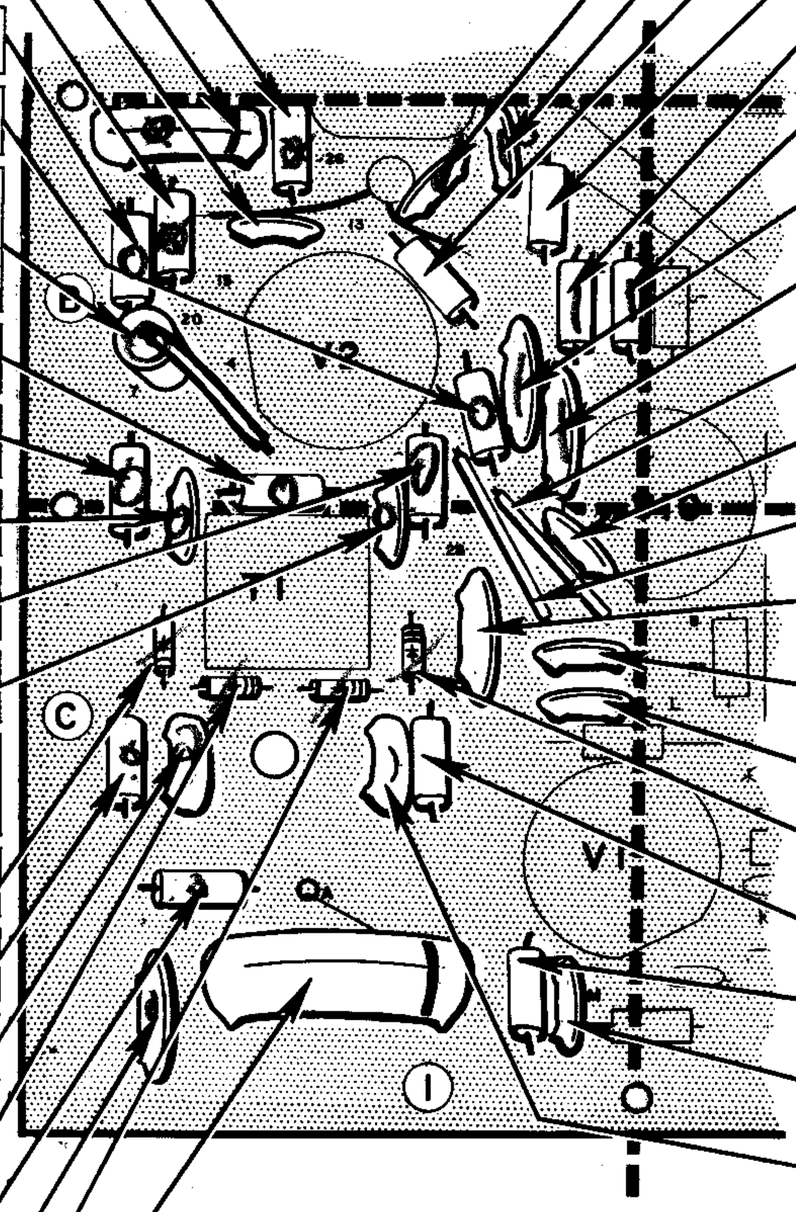

BOARD SECTIONS 1B and 1C

CONTINUE

- ( ) .005 μfd disc capacitor.
- ( ) 18 μμf disc capacitor.
- ( ) 4700 Ω (yellow-violet-red).
- ( ) 220 KΩ (red-red-yellow).
- ( ) 47 KΩ (yellow-violet-orange).
- ( ) 1 megohm (brown-black-green).
- ( ) .02 μfd disc capacitor.
- ( ) .02 μfd disc capacitor.
- ( ) 1-3/4" jumper.
- ( ) 500 μμf disc capacitor.
- ( ) 1-7/8" jumper.
- ( ) .02 μfd disc capacitor.
- ( ) .005 μfd disc capacitor.
- ( ) .005 μfd disc capacitor.
- ( ) Crystal diode.
- ( ) 220 Ω (red-red-brown).
- ( ) 1000 Ω (brown-black-red).
- ( ) 500 μμf disc capacitor.
- ( ) 36 μμf mica capacitor.
- ( ) Check to see that all connections are soldered, and cut off excess leads.

FINISH

PERFORM THE STEPS ON PICTORIAL 4.

PICTORIAL 3

START

- (✓) 360 μμf mica capacitor. Connect only one lead (S-1).
- (✓) 100 KΩ (brown-black-yellow).
- (✓) 1000 μμf mica capacitor.
- (✓) 47 KΩ (yellow-violet-orange).
- (✓) 47 KΩ (yellow-violet-orange).
- (✓) .005 μfd disc capacitor.
- (✓) 100 KΩ (brown-black-yellow).
- (✓) 18 μμf disc capacitor.
- (✓) 2-1/4" jumper.
- (✓) 100 Ω (brown-black-brown).
- (✓) 1 megohm (brown-black-green).
- (✓) .02 μfd disc capacitor.
- (✓) 2-3/8" jumper.
- (✓) 1 megohm (brown-black-green).
- (✓) 4700 Ω (yellow-violet-red).
- (✓) 220 KΩ (red-red-yellow). Use sleeving.
- (✓) .02 μfd disc capacitor.
- (✓) 1 megohm (brown-black-green).
- (✓) 1 megohm (brown-black-green).
- (✓) .1 μfd disc capacitor.
- (✓) .02 μfd disc capacitor.
- (✓) 22 KΩ (red-red-orange).

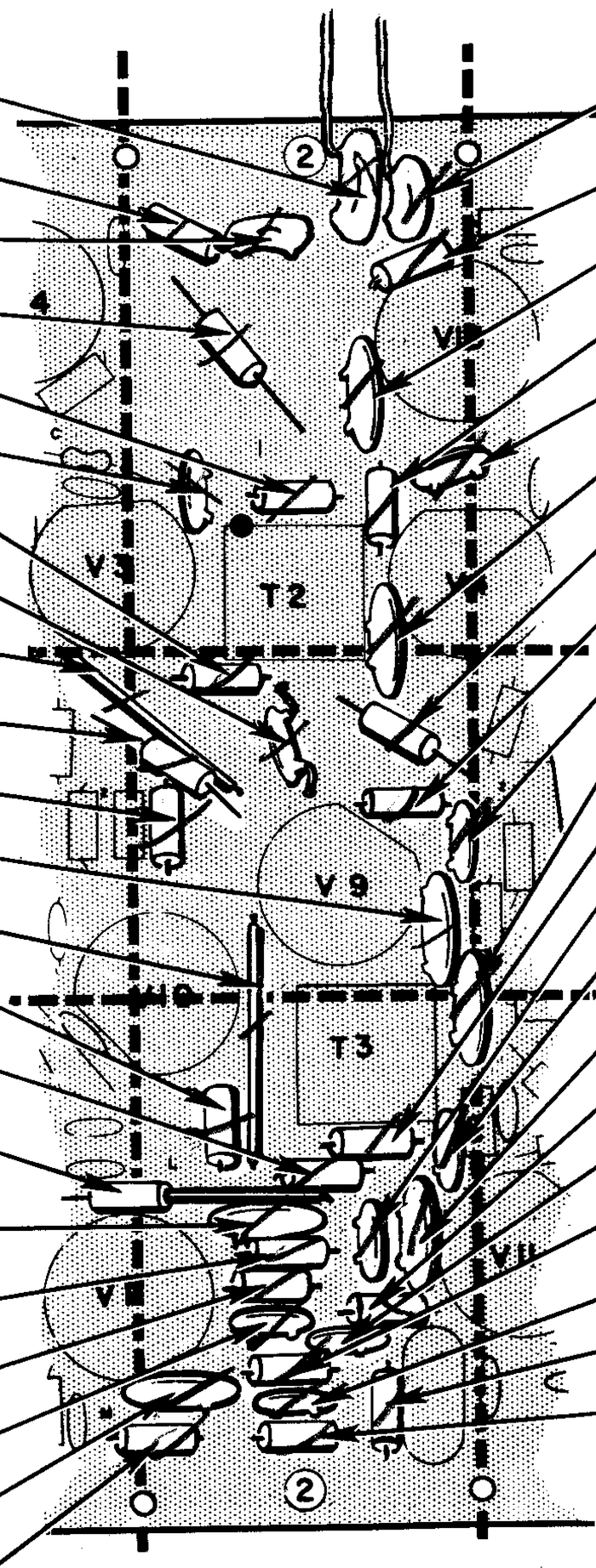

BOARD SECTIONS 2A, B and C

PICTORIAL 4

CONTINUE

- (✓) 100 μμf mica capacitor. Connect only one lead (S-1).
- (✓) 100 KΩ (brown-black-yellow).
- (✓) .02 μfd disc capacitor.
- (✓) 330 Ω (orange-orange-brown).
- (✓) .005 μfd disc capacitor.
- (✓) .02 μfd disc capacitor.
- (✓) 4700 Ω (yellow-violet-red).
- (✓) 4700 Ω (yellow-violet-red).
- (✓) .005 μfd disc capacitor.
- (✓) .02 μfd disc capacitor.
- (✓) 220 KΩ (red-red-yellow).
- (✓) 18 μμf disc capacitor.
- (✓) 18 μμf disc capacitor.
- (✓) .02 μfd disc capacitor.
- (✓) 3300 Ω (orange-orange-red).
- (✓) 47 μμf disc capacitor.
- (✓) 1000 Ω (brown-black-red).
- (✓) 500 μμf disc capacitor.
- (✓) 10 KΩ (brown-black-orange).
- (✓) 100 KΩ (brown-black-yellow).
- ( ) Check to see that all connections are soldered, and cut off excess leads.

FINISH

NOW PERFORM THE STEPS ON PICTORIAL 5

START

- ( ) 10 KΩ (brown-black-orange).
- ( ) .02 μfd disc capacitor.
- ( ) 22 KΩ (red-red-orange).
- ( ) 47 KΩ (yellow-violet-orange).
- ( ) .1 μfd disc capacitor.
- ( ) .005 μfd disc capacitor.
- ( ) 100 KΩ (brown-black-yellow).
- ( ) .02 μfd disc capacitor.
- ( ) 2" jumper. Use sleeving.
- ( ) 1000 Ω (brown-black-red).
- ( ) 2-7/8" jumper. Use sleeving.
- ( ) 1 megohm (brown-black-green).
- ( ) 1000 Ω (brown-black-red).
- ( ) 47 KΩ (yellow-violet-orange).
- ( ) .005 μfd disc capacitor.

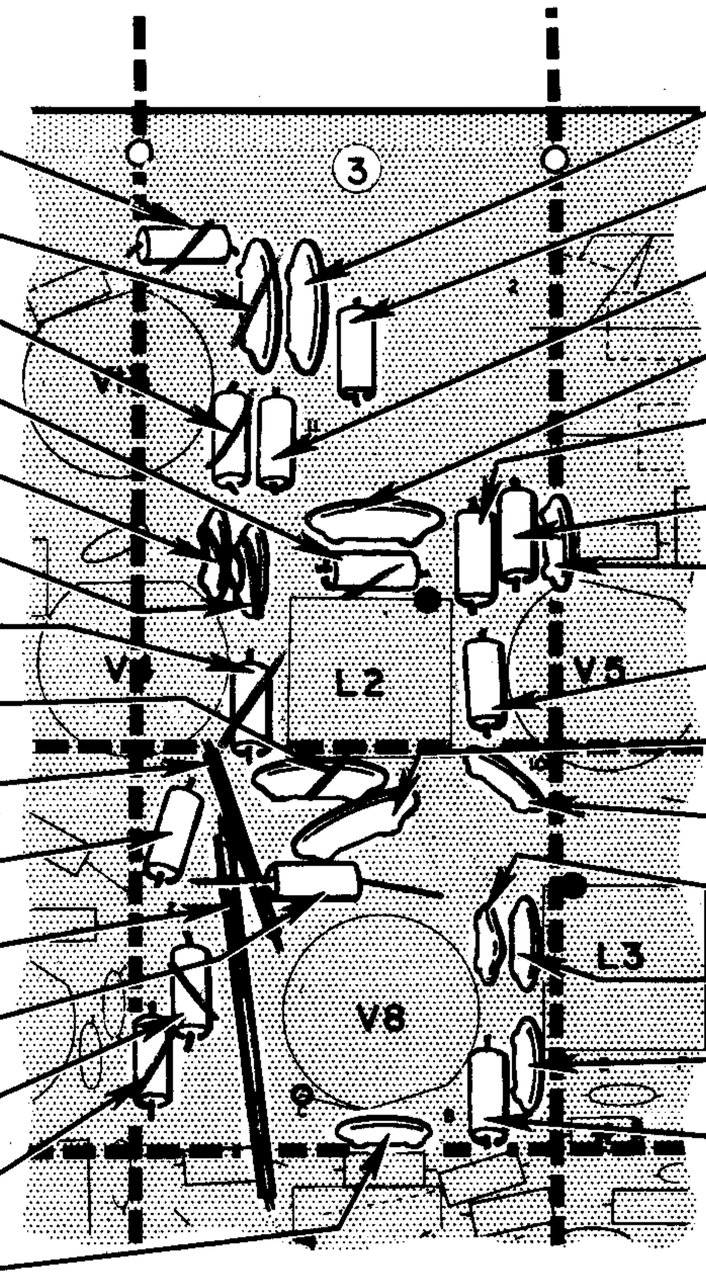

BOARD SECTIONS 3A and B

PICTORIAL 5

CONTINUE

- ( ) .02 μfd disc capacitor.
- ( ) 1000 Ω (brown-black-red).
- ( ) 220 KΩ (red-red-yellow).
- ( ) .02 μfd disc capacitor.
- ( ) 6800 Ω (blue-gray-red).
- ( ) 150 Ω (brown-green-brown).
- ( ) .1 μfd disc capacitor.
- ( ) 47 Ω (yellow-violet-black).
- ( ) .02 μfd disc capacitor.
- ( ) 47 μμf disc capacitor.
- ( ) 47 μμf disc capacitor.
- ( ) .005 μfd disc capacitor.
- ( ) .02 μfd disc capacitor.
- ( ) 47 KΩ (yellow-violet-orange).
- ( ) Check to see that all connections are soldered, and cut off excess leads.

FINISH

NOW PERFORM THE STEPS ON PICTORIAL 6.

START

- ( ) 220 Ω (red-red-brown).
- ( ) 47 KΩ (yellow-violet-orange).
- ( ) 1 megohm (brown-black-green). Use sleeving.
- ( ) 10 KΩ (brown-black-orange).
- ( ) 500 μμf disc capacitor.
- ( ) 47 KΩ (yellow-violet-orange).
- ( ) .02 μfd disc capacitor.
- ( ) 22 KΩ (red-red-orange).
- ( ) 47 μμf disc capacitor.
- ( ) 47 μμf disc capacitor.

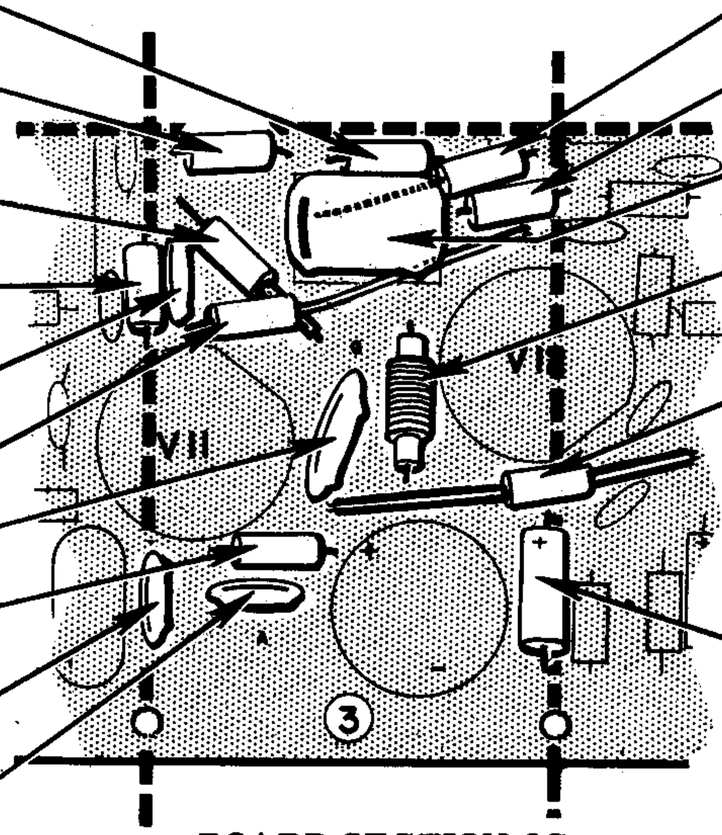

BOARD SECTION 3C

CONTINUE

- ( ) 1 megohm (brown-black-green).
- ( ) 100 KΩ (brown-black-yellow).
- ( ) .4 μfd Mylar capacitor. Use 3/8" sleeving on each lead.
- ( ) 2 mh (#45-47) choke. See Detail 2A.
- ( ) 1 megohm (brown-black-green). Use sleeving.

NOTE: When installing electrolytic capacitors, position the positive (+) end as shown.

- ( ) 10 μfd 10 V electrolytic capacitor.
- ( ) Check to see that all connections are soldered, and cut off excess leads.

FINISH

NOW PERFORM THE STEPS ON PICTORIAL 7

PICTORIAL 6

START

- ( ) 2-1/2" jumper. Information on the POWER SUPPLY is on Page 37.
- ( ) 100 KΩ (brown-black-yellow).
- ( ) 47 KΩ (yellow-violet-orange).
- ( ) 22 KΩ (red-red-orange).
- ( ) 1300 μμf mica capacitor.
- ( ) .02 μfd disc capacitor.

NOTE: When installing silicon diodes, position the cathode end as shown. See Detail 7A.

- ( ) Silicon diode.
- ( ) Silicon diode.

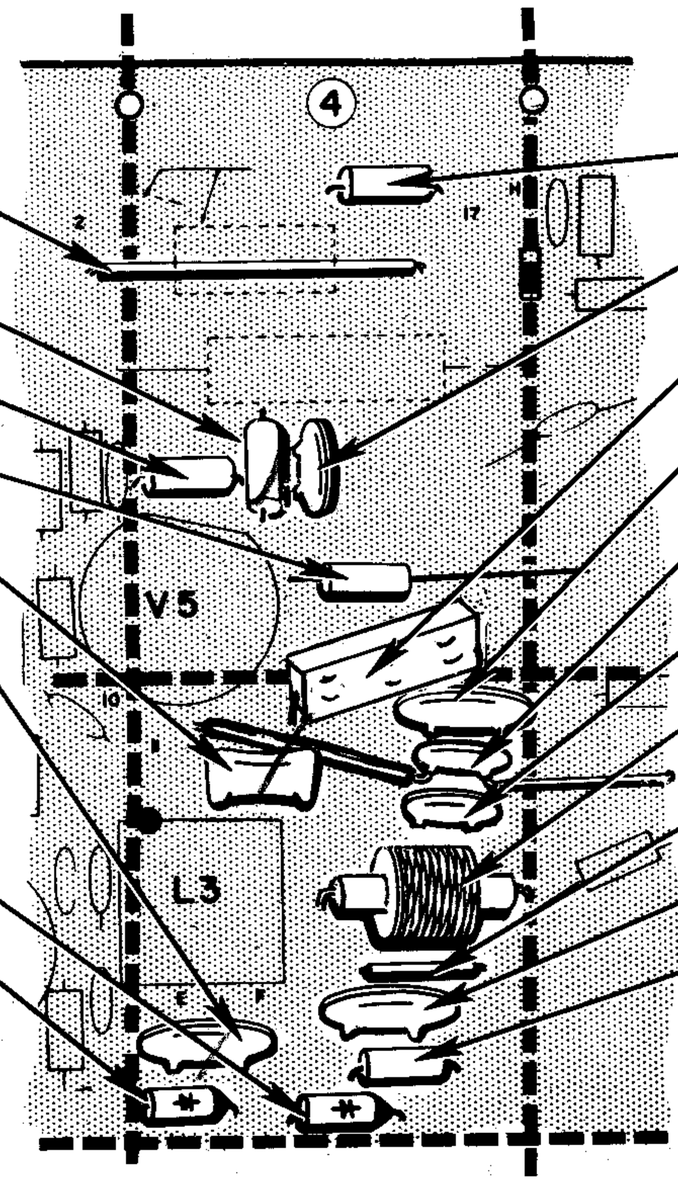

BOARD SECTIONS 4A and B

CONTINUE

- ( ) 220 KΩ (red-red-yellow).
- ( ) .005 μfd disc capacitor.
- ( ) 22 μμf mica capacitor.
- ( ) .02 μfd disc capacitor.
- ( ) .005 μfd disc capacitor. Use sleeving.
- ( ) .005 μfd disc capacitor.
- ( ) 1 mh (#45-3) choke. See Detail 2A.
- ( ) 1-1/2" jumper.
- ( ) .02 μfd disc capacitor.
- ( ) 100 KΩ (brown-black-yellow).
- ( ) Check to see that all connections are soldered, and cut off excess leads.

FINISH

NOW PERFORM THE STEPS ON PICTORIAL 8.

PICTORIAL 7

NOTE: WHEN INSTALLING SILICON DIODES, THE CATHODE END SHOULD BE PLACED AS DIRECTED. THE CATHODE END IS MARKED WITH EITHER COLOR END, COLOR DOT, OR COLOR BAND. IN THE ILLUSTRATION, THE SYMBOL K INDICATES THE CATHODE END.

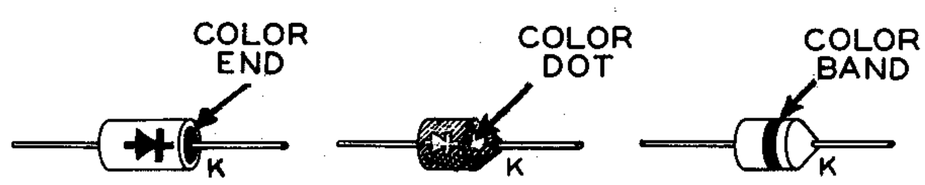

START

- ( ) .02 μfd disc capacitor.
- ( ) 220 KΩ (red-red-yellow).
- ( ) .005 μfd disc capacitor.
- ( ) 1 megohm (brown-black-green).
- ( ) 47 KΩ (yellow-violet-orange).
- ( ) 100 KΩ (brown-black-yellow).
- ( ) 100 μμf mica capacitor.
- ( ) .005 μfd disc capacitor.
- ( ) 500 μμf disc capacitor.
- ( ) 100 Ω (brown-black-brown).
- ( ) 1000 Ω (brown-black-red).
- ( ) 10 μfd electrolytic capacitor.
- ( ) .005 μfd 1.6 KV disc capacitor.

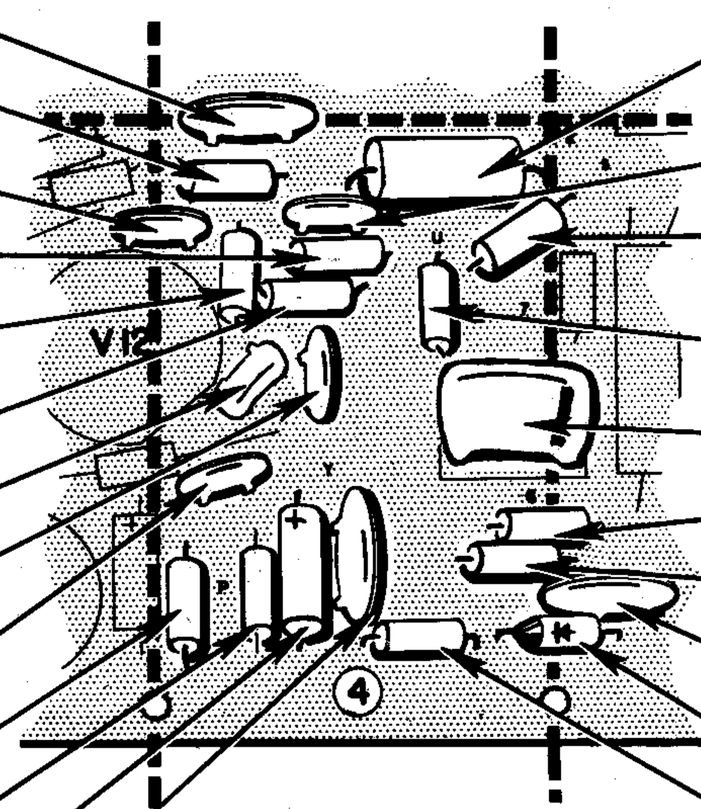

BOARD SECTION 4C

PICTORIAL 8

CONTINUE

- ( ) 12 KΩ 2 watt (brown-red-orange).
- ( ) 500 μμf disc capacitor.
- ( ) 3.3 megohm (orange-orange-green).
- ( ) 10 KΩ (brown-black-orange).
- ( ) .2 μfd Mylar capacitor.
- ( ) 220 KΩ (red-red-yellow).
- ( ) 100 KΩ (brown-black-yellow).
- ( ) .02 μfd disc capacitor.
- ( ) Silicon diode.
- ( ) 22 KΩ (red-red-orange).
- ( ) Check to see that all connections are soldered, and cut off excess leads.

FINISH

NOW PERFORM THE STEPS ON PICTORIAL 9.

START

- (✓) 220 Ω (red-red-brown).
- (✓) .005 μfd disc capacitor.
- (✓) Crystal diode.
- (✓) 10 KΩ (brown-black-orange).
- (✓) 22 μμf mica capacitor.
- (✓) 100 Ω (brown-black-brown).
- (✓) .005 μfd disc capacitor.
- (✓) 6800 Ω (blue-gray-red).
- (✓) 100 Ω (brown-black-brown).
- (✓) 18 μμf disc capacitor.
- (✓) .005 μfd disc capacitor.
- (✓) 1 megohm (brown-black-green).
- (✓) 100 KΩ (brown-black-yellow).
- (✓) 47 KΩ (yellow-violet-orange).
- ( ) 6800 Ω (blue-gray-red).
- (✓) 100 KΩ (brown-black-yellow).
- (✓) .02 μfd disc capacitor.
- (✓) 1000 Ω (brown-black-red).

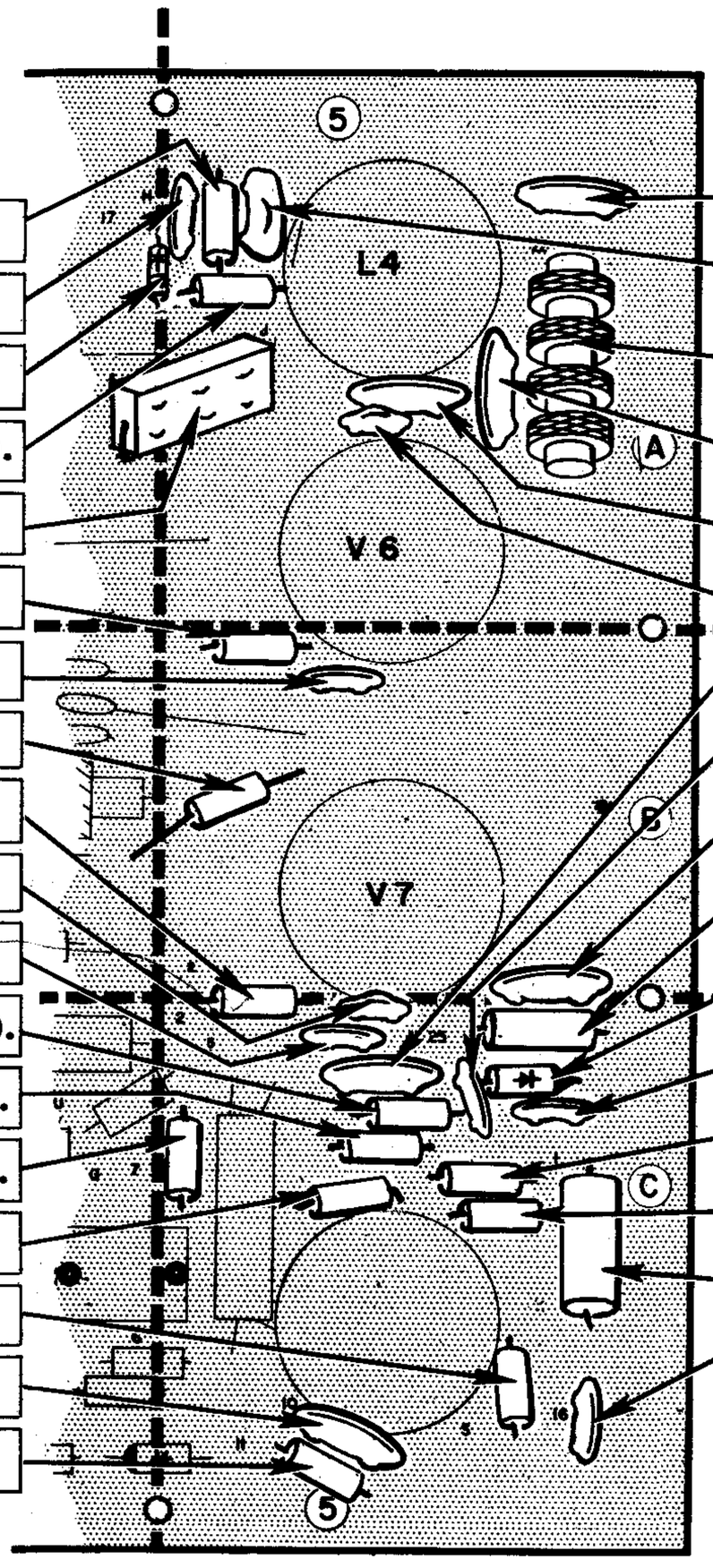

BOARD SECTIONS 5A, B and C

PICTORIAL 9

CONTINUE

- (✓) .005 μfd 1600 V disc capacitor.
- (✓) 1000 μμf mica capacitor.
- (✓) 1.1 mh (#45-4) choke See Detail 2A.
- (✓) .005 μfd 1.6 KV disc capacitor.
- (✓) .02 μfd disc capacitor.
- (✓) 18 μμf disc capacitor.
- (✓) .02 μfd disc capacitor.
- (✓) .005 μfd disc capacitor.
- (✓) .02 μfd disc capacitor.
- (✓) .33 Ω 2 watt (orange-orange-silver).
- ( ) Silicon diode.
- (✓) .005 μfd disc capacitor.
- (✓) 10 KΩ (brown-black-orange).
- (✓) 10 KΩ (brown-black-orange).
- (✓) 20 Ω 2 watt (red-black-black).
- (✓) .005 μfd disc capacitor.
- (✓) Check to see that all connections are soldered, and cut off excess leads.

FINISH

THE REMAINING RESISTORS AND CAPACITORS WILL BE USED LATER.

Refer to Pictorial 10 for the following steps.

NOTE: Mounting the following components will be easier if each one is soldered right after it is installed on the circuit board. When mounting the following transformers and coils, be sure to align the color dot with the dot printed on the circuit board. See Detail 10A.

CAUTION: Do not turn any of the adjusting slugs of the coils or transformers, as they are pretuned.

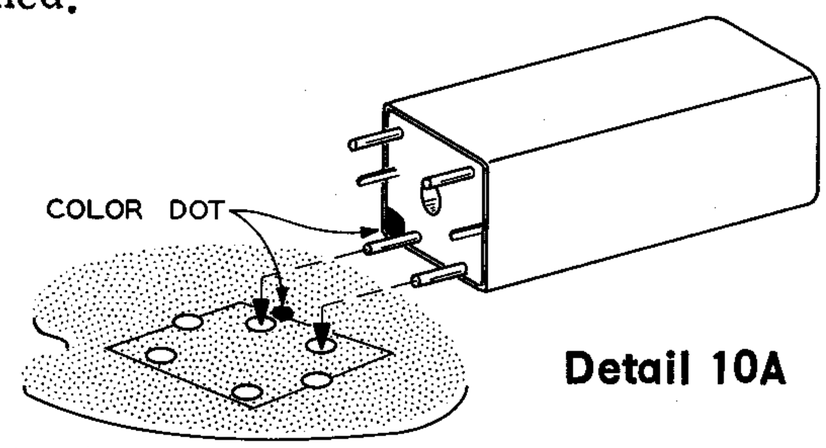

Detail 10A

( ) L1. Install coil #40-509 at location L1.

( ) T1. Install transformer #52-63 at location T1.

( ) T2. Install transformer #52-63 at location T2.

( ) T3. Install transformer #52-63 at location T3.

( ) L2. Install coil #40-516 at location L2.

( ) L3. Install coil #40-513 at location L3.

( ) Y1. Install crystal #404-197 at section 2C.

( ) Y2, Y5. Referring to Detail 10B, install two crystals (#404-191) in section 1A.

( ) Y3, Y4. In a like manner, install two crystals (#404-192) in section 1A.

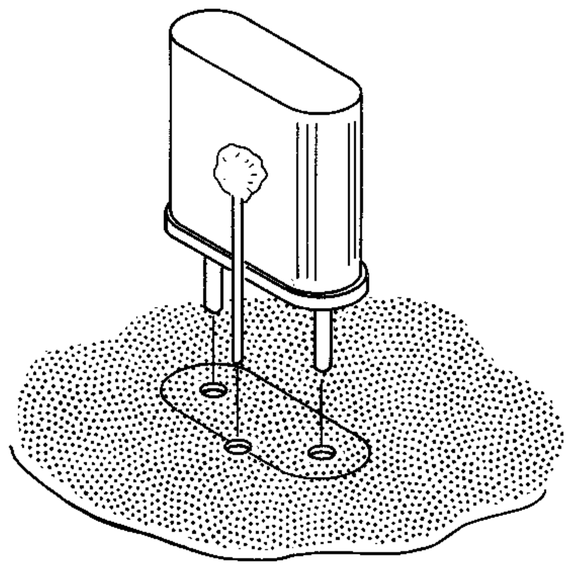

Detail 10B

( ) Referring to Detail 10C, place a 1/4" length of sleeving on each of the four leads of bifilar choke #45-58.

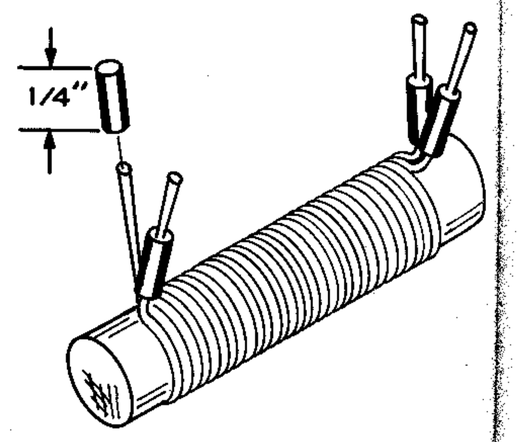

Detail 10C

( ) RFC60. Install the bifilar choke in section 5C. The leads can be placed in either circuit board hole at the ends of the choke. Press the choke down below the top of the Calibrator socket.

( ) L4. Referring to Detail 10D, install the #40-510 coil at L4. Be sure to position the bottom end of the coil winding as shown. The coil lead will be connected later.

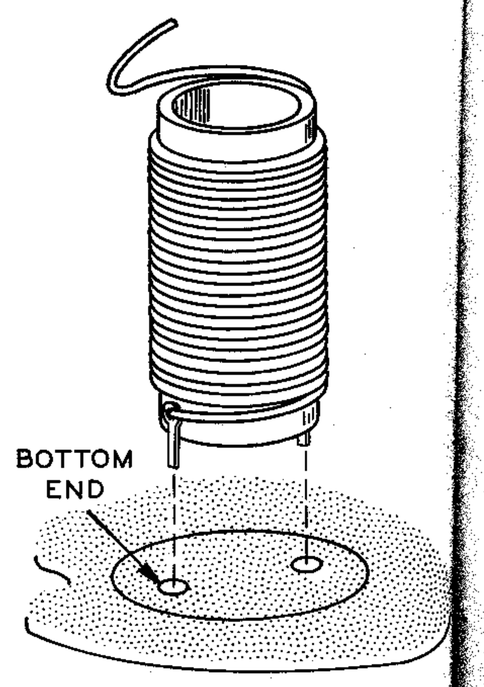

Detail 10D

( ) Referring to Detail 10E bend the lugs of the 200 Ω miniature control (#10-130) as shown.

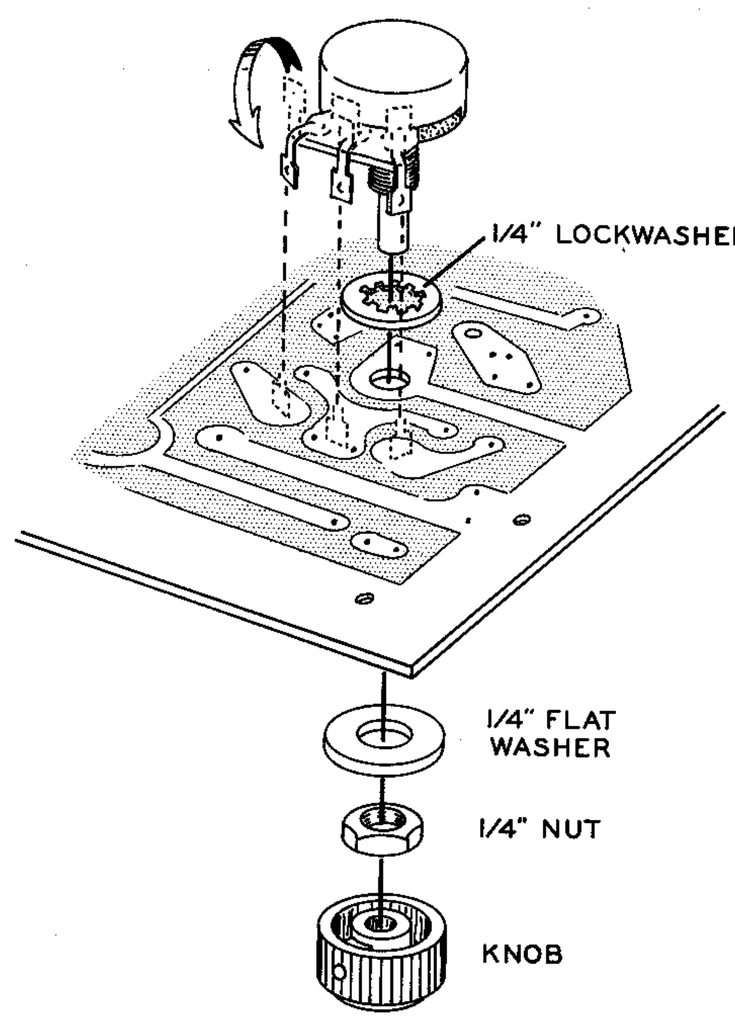

Detail 10E

(✓) Install the control at the Carrier Null location in section 1C. Secure the control with a 1/4" lockwasher, 1/4" flat washer, and a 1/4" nut. Before soldering, be sure the control lugs are aligned with the foil.

(✓) Install the small knob on the control shaft and tighten the setscrew.

(✓) Place 3/4" lengths of sleeving on the leads of the neon lamp. Install the lamp at NE in section 1B.

(✓) C121. Install the 20 μfd 350 V electrolytic capacitor in section 3C. Be sure to position the positive (+) lead of the capacitor at the (+) marking on the circuit board.

CAUTION: The inner insulation of the shielded cable melts easily. Therefore, the inner conductor and shield should be soldered as quickly as possible to prevent shorting of the cable.

(✓) Referring to Detail 10F, cut a 5-1/2" length of single-conductor shielded cable and prepare it as shown.

(✓) Connect the prepared cable from point A in section 1C to point A in section 3C of the circuit board. The end with the shield is connected in section 1C. The inner lead goes to the hole with the circle.

(✓) In a like manner, prepare a 6-1/2" length of single-conductor shielded cable.

(✓) Connect the prepared cable between points C in sections 1A and 3B of the circuit board. Place a 1/2" length of sleeving on the shield of the cable, and connect this end in section 3B. Insert the inner lead of the cable in the circled hole.

( ) Prepare a 6" length of single-conductor shielded cable. Connect the prepared cable between points B in sections 1B and 3B of the circuit board. The end of the cable with the shield goes to section 1B.

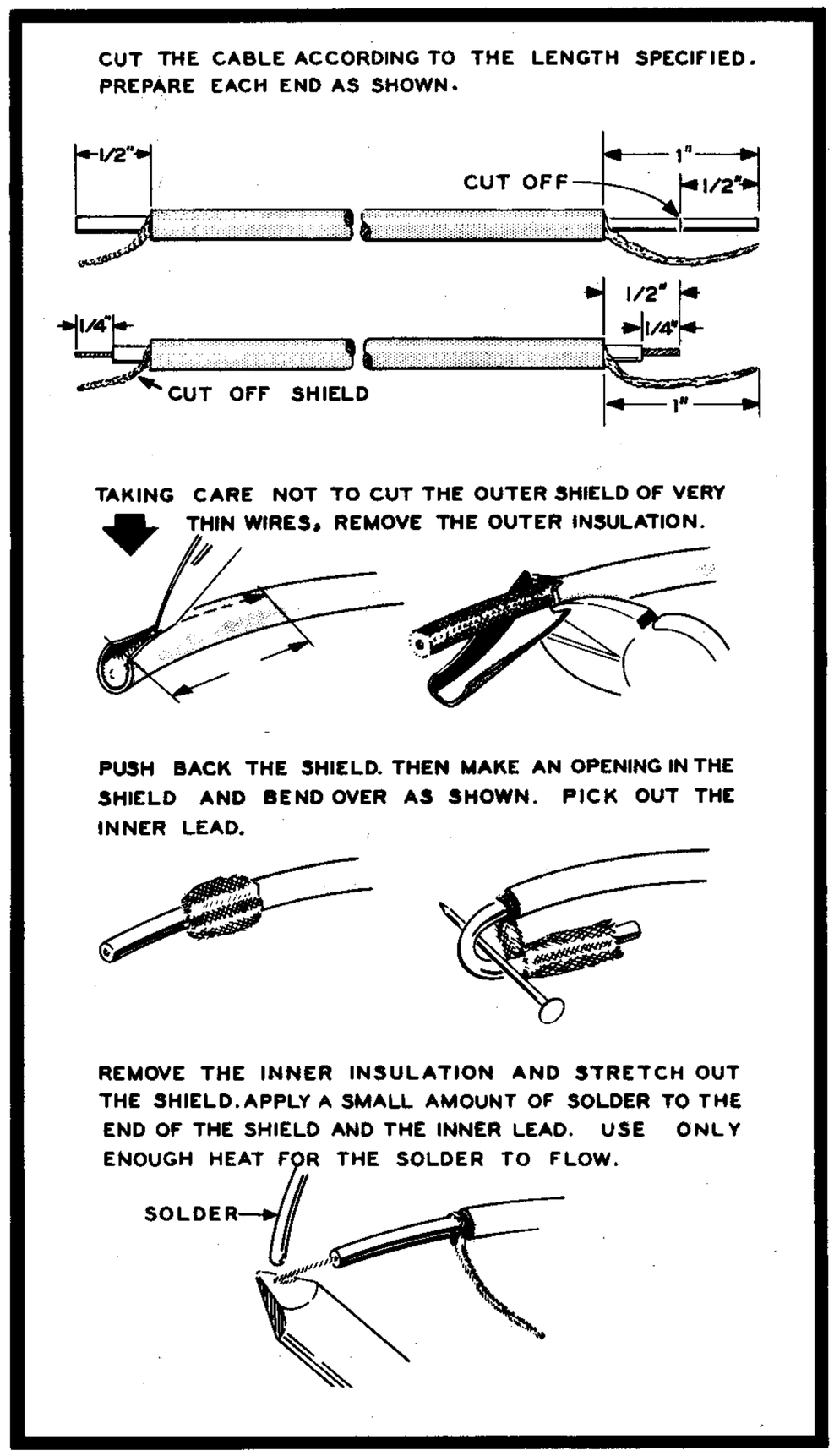

Detail 10F

This completes the mounting of all components on the top (lettered side) of the circuit board. Check carefully to see that all connections are soldered and that there are no solder bridges between foils.

Set the circuit board aside temporarily.

REFERENCE HOLE
4-40 X 5/16" SCREW
FINAL TUNE
POWER PLUG
8
1
VFO TUNE
SAND THIS SURFACE
3/4" SPACER
AC
#6 SOLDER LUG
AF
LUG 1
#6 SOLDER LUG
AD
4-40 NUT
#6 LOCKWASHER
L6
#8 FLAT METAL WASHER
#6 LOCKWASHER
#4 LOCKWASHER
#4 LOCKWASHER
4-40 X 5/16" SCREW
6-32 X 1" SCREW

PICTORIAL 11

PARTS MOUNTING-CHASSIS

Refer to Pictorial 11 for the following steps.

(✓) Referring to Detail 11A, install the octal plug at the Power Plug location, using the octal socket ring. Position pins 1 and 8 of the socket as shown.

(✓) L5. Install coil #52-25 at L5 on the chassis, using the transformer mounting clip. Position the coil lugs as shown.

NOTE: Keep the plates of the variable capacitors closed to prevent damage.

(✓) C131. Install the VFO variable capacito (#26-28), using four #4 lockwashers, flat metal washers, and 4-40 x 5/1 screws. Bend capacitor lug 1 upward shown.

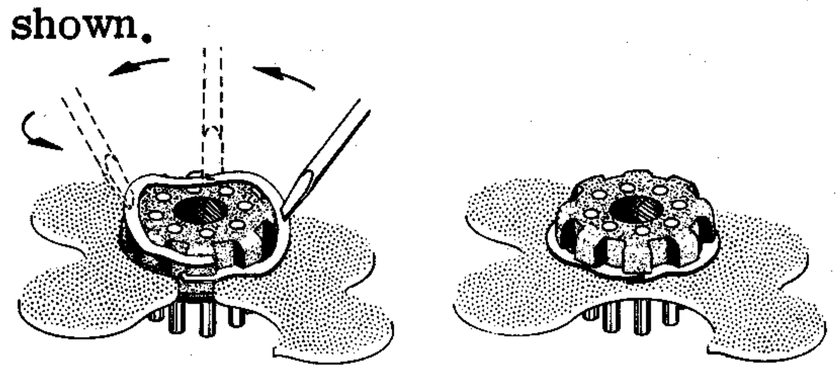

HOLD THE PLUG IN THE CHASSIS HOLE AND PLACE ONE END OF THE RING INTO THE GROOVE OF THE PLUG. USING A SCREWDRIVER, PRESS THE RING INTO THE GROOVE AROUND THE PLUG.

Detail 11A

( ) C65. Install the Final Tune variable capacitor (#26-35), using 3/4" spacers, seven #6 lockwashers, a #6 solder lug, and 6-32 x 1" screws. Position solder lug AF as shown, and bend the capacitor lugs upward.

( ) Using the sandpaper supplied, lightly sand the foil around the outside edge of the circuit board to remove the lacquer coating and thus permit a good ground connection between the circuit board foil and the chassis. Also sand the mating surface of the chassis.

( ) Remove any mounds of solder along the outside edges of the circuit board.

( ) Install the circuit board on the chassis, using 4-40 x 5/16" screws, eighteen #4 lockwashers, two #6 solder lugs, and 4-40 nuts. Position solder lugs AC and AD as shown. Be sure the REF-HOLE of the circuit board is positioned as shown.

( ) Bend solder lug AD up, away from the circuit board.

Refer to Pictorial 12 for the following steps.

( ) Referring to Detail 12A, install a 10 KΩ tab-mount control (#10-57) in the S Meter Adj location in the chassis divider. Twist the control mounting tabs 1/8 turn.

( ) Similarly install a 1 megohm tab-mount control (#10-127) at the VOX Delay location in the chassis divider.

( ) Install a 10 KΩ tab-mount control (#10-57) at the Final Bias location on the rear of the chassis.

( ) Install a 100 KΩ tab-mount control (#10-58) at the Tune Level location.

( ) Install a 1 megohm tab-mount control (#10-127) at the Mic Gain location.

( ) Referring to Detail 12B, install phono sockets at the Rcvr, Ant, Ext Relay, and Spkr locations. Use 6-32 x 1/4" screws, #6 lockwashers, and 6-32 nuts. Position these sockets as shown.

( ) Referring to Detail 12C, install the female microphone connector at the Mic location. Use the lockwasher and nut furnished on the connector. Position the connector lugs as shown in Pictorial 12. The lug numbers are molded into the connector.

( ) Install rubber grommets in holes AA and AB of the chassis divider.

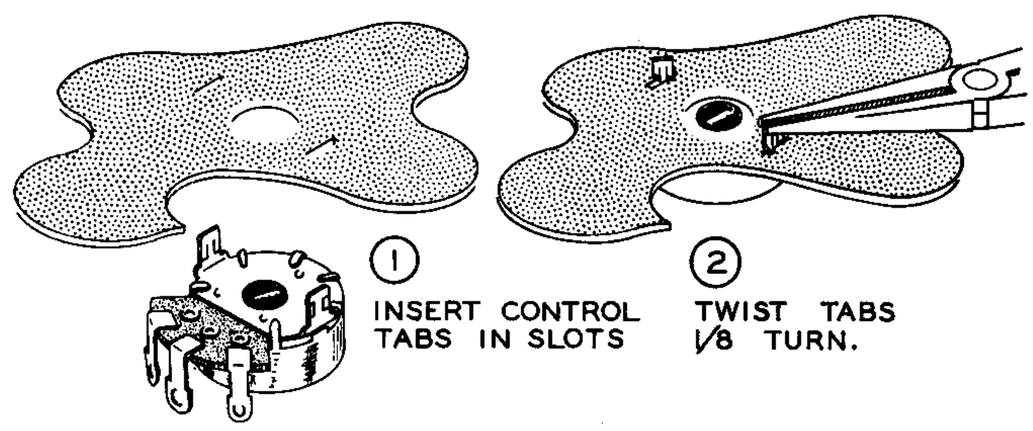

Detail 12A

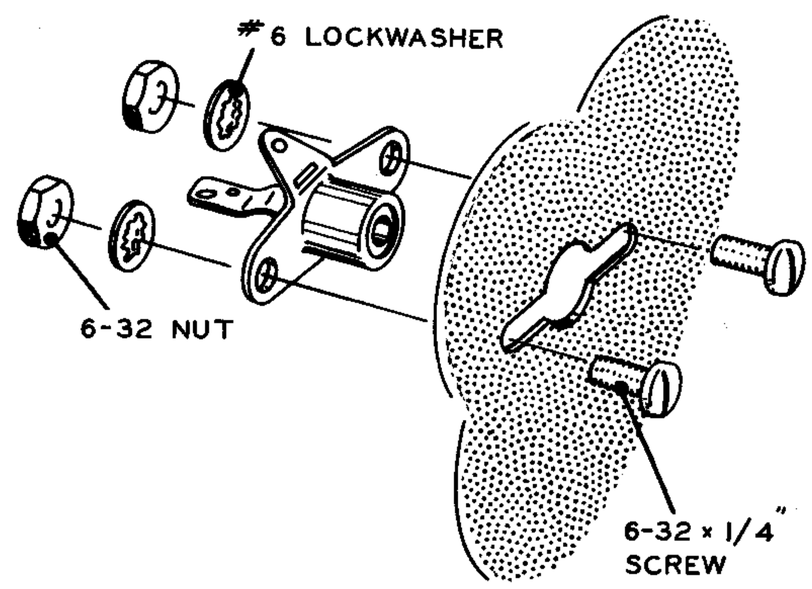

Detail 12B

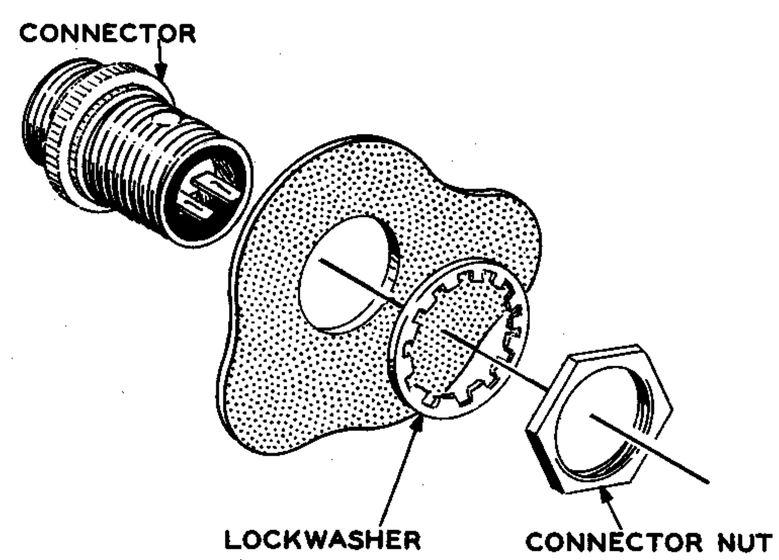

Detail 12C

CHASSIS WIRING-BOTTOM

Refer to Pictorial 13 for the following steps.

( ) Referring to Detail 13A, install solder terminals in the circuit board, from the foil side, at the forty-five numbered and lettered locations, except holes A, B, C, D, and V.

A small pair of long-nose pliers may be helpful in installing the terminals. Do not solder these terminals to the circuit board at this time. When soldering these terminals later, be sure that solder flows into and around the terminal.

Detail 13A

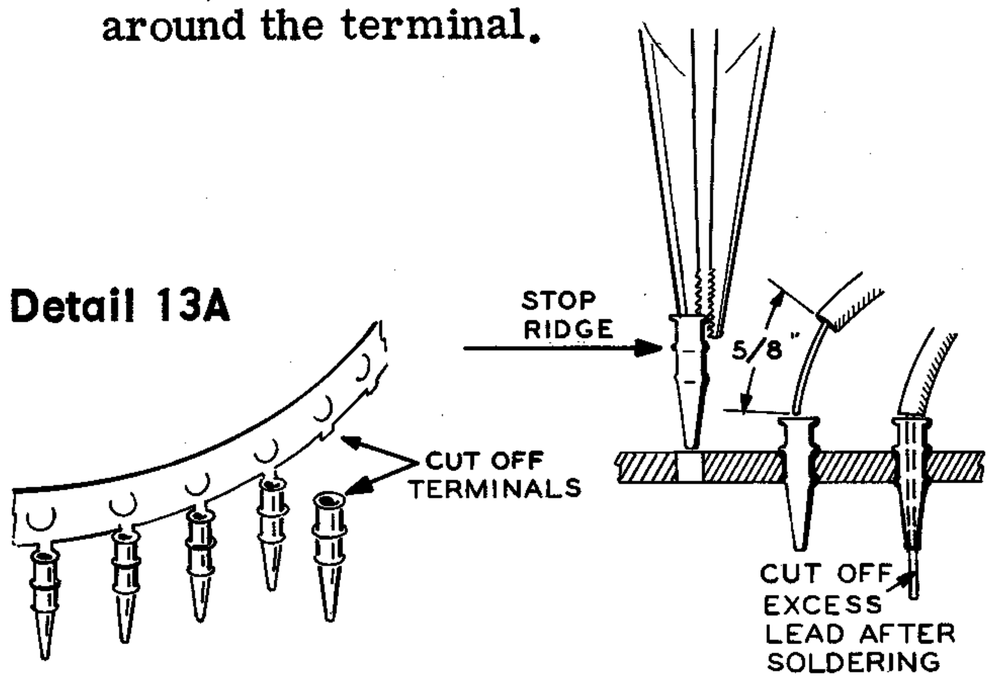

NOTE: Use hookup wire for the following steps. Strip 5/8" insulation from the ends of the specified lengths of wire that connect to terminals, and 1/4" insulation from the other wires.

( ) Connect a 2" wire between points D in section 3B of the circuit board. Solder the wire directly to the foil and position the wire about 1/4" away from the board.

( ) Connect one end of a 2" wire to terminal J in section 5A (S-1). The other end will be connected later. Be sure to solder the terminal to the circuit board foil when soldering the wire to the terminal.

( ) Connect one end of a 6" wire to terminal H in section 4A (S-1). Pass the other end through grommet AA to be connected later.

( ) Connect a 3" wire from terminal S in section 5C (S-1) to lug 2 of the Rcvr socket (NS).

( ) Connect a 6-3/4" wire from terminal T in section 5C (S-1) to lug 3 of the Final Bias control (S-1).

( ) Connect a 5" wire from terminal R in section 4C (S-1) to lug 2 of the Final Bias control (S-1).

( ) Connect a 4-1/2" wire from terminal Q in section 4C (S-1) to lug 1 of the Final Bias control (S-1).

( ) Connect a 5-1/2" wire from terminal U in section 4C (S-1) to pin 1 of the Power plug (S-1).

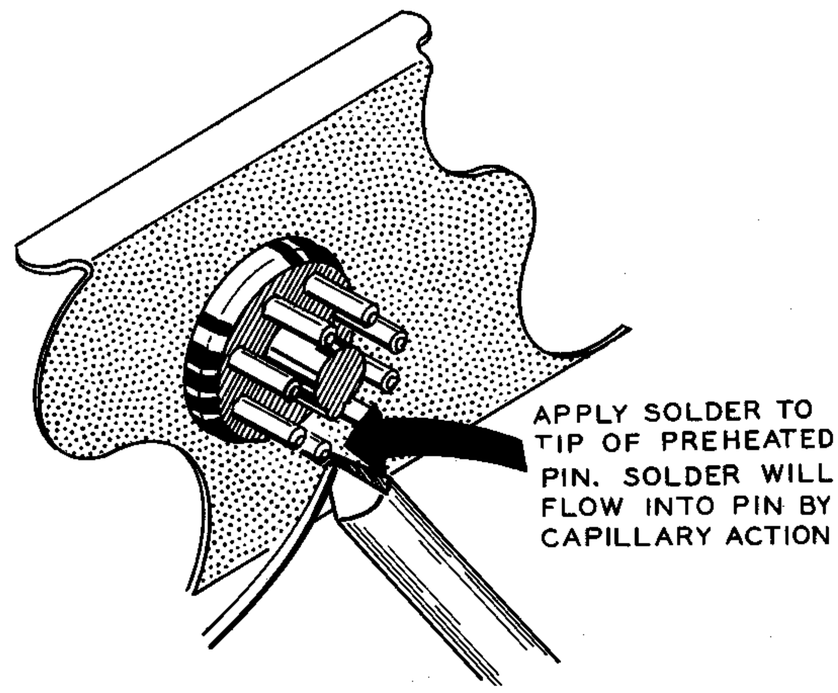

Detail 13B

( ) Connect a 2" wire from lug 2 of the Power plug (S-1) to lug 1 of the Rcvr socket (NS).

( ) Connect a 2-1/2" wire from lug 2 of the Tune Level control (S-1) to solder lug AD (NS).

( ) Connect a 1-1/2" wire from terminal M in section 1C (S-1) to lug 2 of the Mic Gain control (S-1). Position the wire as shown.

( ) Connect a 2-1/2" wire from terminal L in section 2C (S-1) to lug 3 of the Mic Gain control (S-1).

( ) C15. Connect a .02 μfd disc capacitor from lug 1 of the Mic Gain control (NS) to solder lug AD (NS). Position the capacitor as shown.

( ) C10. Connect a .005 μfd disc capacitor from lug 2 of the Mic connector (NS) to solder lug AD (NS). Use sleeving on both leads.

( ) R13. Connect a 1 megohm resistor (brown-black-green) from terminal 1 in section 1C (NS) to lug 1 of the Mic Gain control (S-2). Use sleeving on the lead to the control.

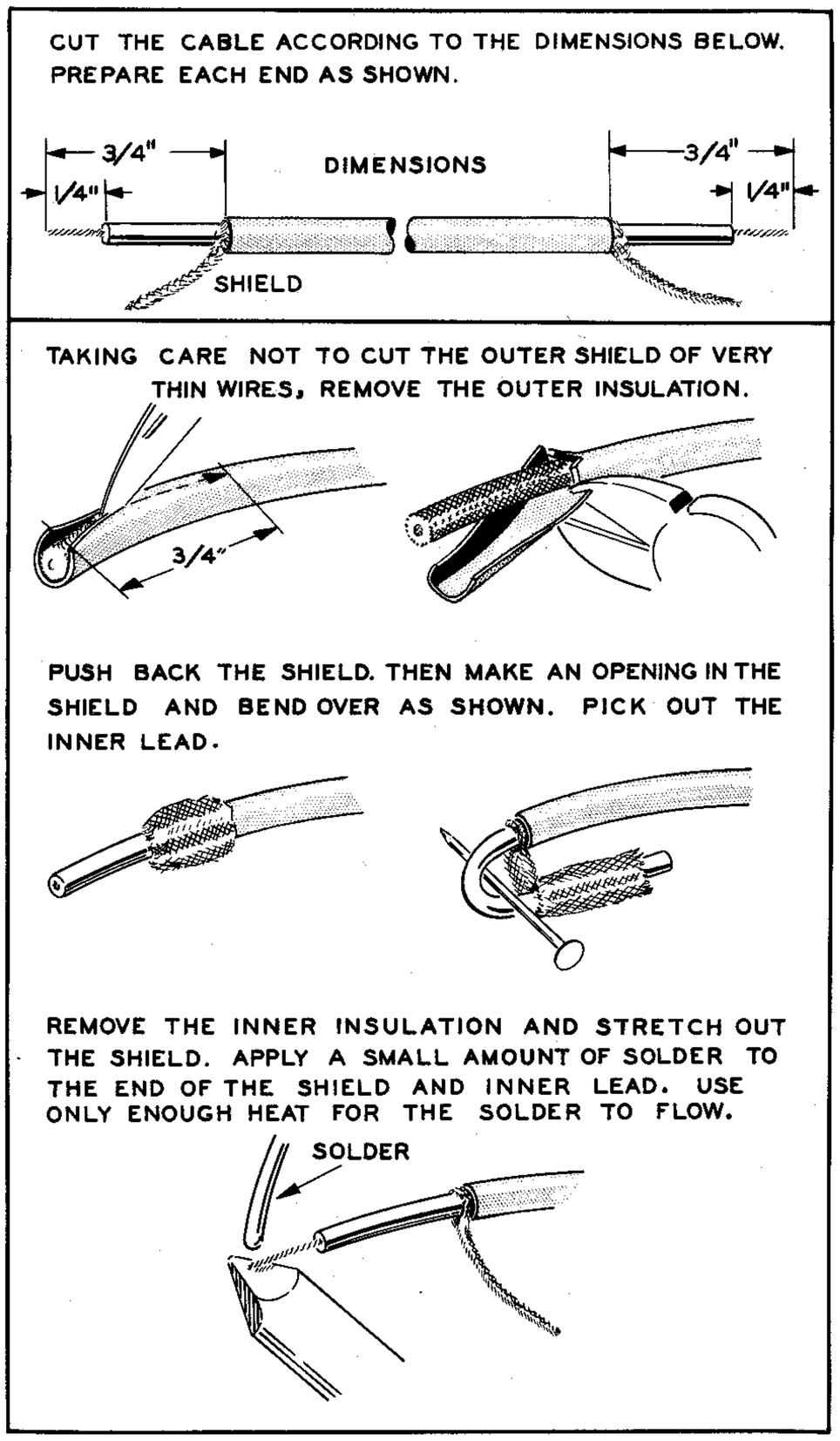

Detail 13C

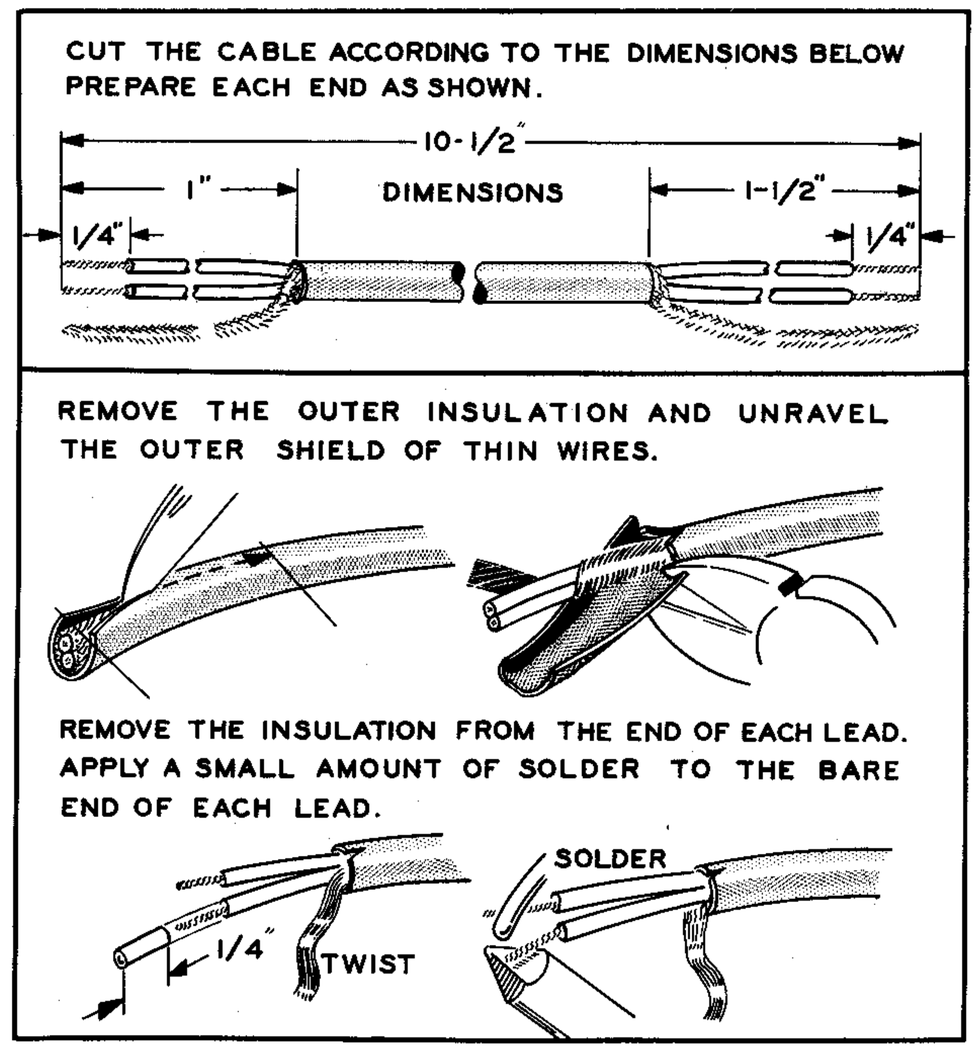

Detail 13D

(✓) Referring to Detail 13C, prepare a 5" length of single-conductor shielded cable as shown.

(✓) At one end of this prepared cable, connect the inner lead to terminal E (S-1) and the shield to terminal F (S-1) in section 4B.

(✓) At the other end of the cable, connect the shield to lug 1 (NS) and the inner lead to lug 2 (NS) of the Rcvr socket.

(✓) Referring to Detail 13C, prepare a 3" length of single-conductor shielded cable as shown. Cut the shield off at one end of the cable.

(✓) At the end of the prepared cable with the shield, connect the inner lead to terminal K in section 2C (S-1) and the shield to solder lug AD (S-4).

(✓) Connect the inner lead at the other end of the cable to lug 1 of the Mic connector (S-1).

(✓) Referring to Detail 13D, prepare a 10-1/2" length of 2-conductor shielded cable as shown. The shield should not be cut until after the connections are made.

(✓) At the end of the prepared cable with the longest leads, connect the yellow lead to terminal Y in section 4C (S-1), the green lead to terminal G in section 3C (S-1), and the shield to lug 1 of the Ext Relay socket (NS). Pass the free end of the cable through grommet AB for connection later.

(✓) C5. Connect a .005 μfd disc capacitor between lugs 1 (S-2) and 2 (NS) of Ext Relay socket.

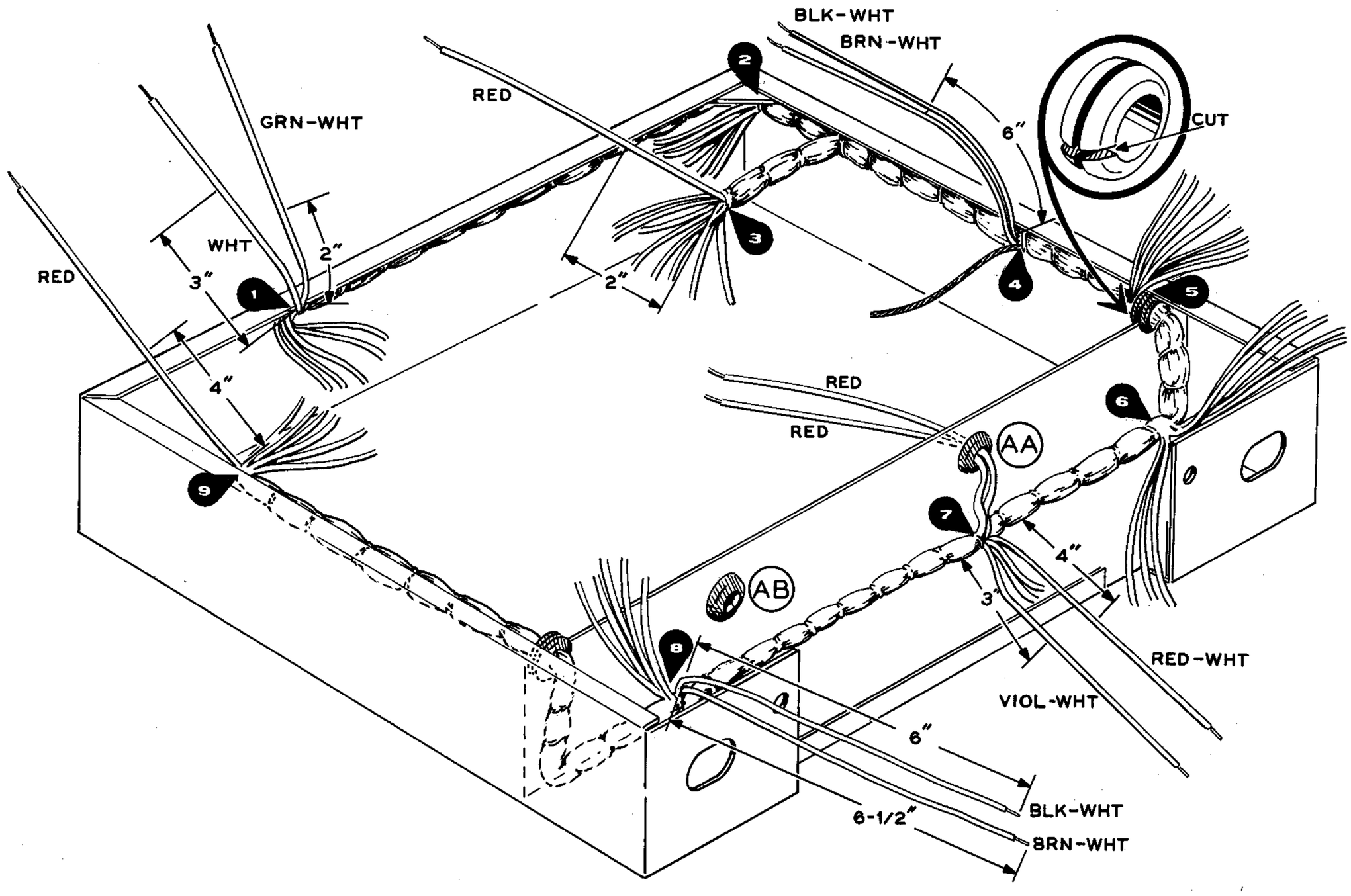

Detail 14A

CABLE ASSEMBLY WIRING

Refer to Pictorial 14 for the following steps.

NOTE: The cable assembly has a number of points where several wires "break out" from the assembly. These points are indicated in the following steps as BO#1 through BO#9.

(✓) Referring to Detail 14A, position the cable assembly in the chassis. BO#2 (breakout) should be positioned in the rear corner of the chassis. Cut one side of one of the rubber grommets and place it around the cable assembly next to BO#5. Place the grommet on the edge of the chassis partition. Push the grommet and cable assembly under the lip of the chassis.

(✓) Form the cable assembly down and along the bottom edge of the chassis partition. Bend the cable assembly up at BO#8 and back over the chassis partition, placing another grommet on the chassis partition as before. The remainder of the cable assembly should be formed straight back along the side of the chassis.

NOTE: In the following steps, a number of the cable assembly wires will have lengths of wire cut from them. These wires should be saved for use in later wiring steps. Measure the wire from the breakout of the cable assembly and cut them to the lengths given. After cutting, strip 1/2" of insulation from the ends of the wires of the cable assembly.

(✓) At BO#1, cut all but 3" from the white wire.

(✓) At BO#1, cut all but 2" from the green-white wire.

(✓) At BO#3, cut all but 2" from the red wire.

(✓) At BO#4, cut all but 6" from the black-white and brown-white wires.

(✓) At BO#7, pass the two red wires through grommet AA for connection later.

( ) Also at BO#7, cut all but 4" from the red-white wire, and all but 3" from the violet-white wire.

( ) At BO#8, cut all but 6" from the black-white wire and all but 6-1/2" from the brown-white wire. Pass these two wires through grommet AB for connection later.

( ) At BO#9, cut all but 4" from the red wire.

NOTE: The wires cut from the cable assembly should be used for the following steps. Cut the wires to the length called for, then strip 1/2" insulation from the ends of the wires that connect to terminals, and 1/4" insulation from other wires.

The terminals in the circuit board are numbered to correspond to the wire colors of the cable assembly. The color-number relationship is based on the resistor color code; brown = 1, red = 2, orange = 3, etc. For instances, a red wire will go to a #2 terminal, and an orange wire to a #3 terminal, etc. Wires with a single color stripe and a white background are in the 10 series numbers; a black-white wire will go to a #10 terminal, an orange-white wire to a #13 terminal, etc. Wires with two like color stripes and a white background are in the 20 series numbers; a green-green-white wire would go to a #25 terminal, a blue-blue-white wire to a #26 terminal, etc.

( ) Connect a 5" red wire from terminal 2 in section 5C (NS) to lug 3 of the Power plug (NS).

NOTE: Use the short black-white and brown-white wires for the following two steps.

( ) Connect a 3" black-white wire from terminal 10 in section 5C (S-1) to lug 6 of the Power plug (NS).

( ) Connect a 3-1/2" brown-white wire from terminal 11 in section 5C (S-1) to lug 7 of the Power plug (NS).

( ) Connect one end of a 6" violet-white wire to terminal 17 in section 4A (S-1). Pass the other end through grommet AA for connection later.

( ) Connect one end of the long brown-white wire to terminal 11 in section 3A (NS). Pass the other end through grommet AB for connection later. Position as shown in Pictorial 14.

( ) Connect one end of the long black-white wire to terminal 10 in section 1A (NS). Pass the other end through grommet AB for connection later. Position as shown in Pictorial 14.

( ) Connect a 3" red wire from terminal 2 in section 3B (S-1) to terminal 2 in section 1B (NS).

( ) Connect an 8" green-white wire from terminal 15 in section 1B (S-1) to lug 2 of the Mic connector (NS).

( ) Connect a 2" white wire from terminal 9 in section 2C (S-1) to lug 3 of the Tune Level control (NS).

The remaining red-white wire will be used later.

NOTE: The stripped end of the cable assembly wires are correct for connecting to circuit board solder terminals, but are too long for control and switch lugs, and should be cut to the desired lengths when making connections.

Connect the cable assembly wires from BO#1 as follows:

( ) White to lug 3 of the Tune Level control (S-2).

( ) Green-white to lug 2 of the Mic connector (S-3).

( ) Violet to terminal 7 in section 1B (S-1).

( ) Brown to terminal 1 in section 1C (S-2).

( ) Gray to terminal 8 in section 2C (S-1).

Connect the cable assembly wires from BO#2 as follows:

( ) Two black-white to pin 6 of the Power plug (S-3). Be sure enough solder flows into the Power plug pin to solder all three wires. After the connection has cooled, pull on each of the wires from inside the chassis to see that all are soldered.

( ) Two brown-white to pin 7 of the Power plug (S-3). Make sure all three wires are soldered.

( ) Either gray-white to pin 5 of the Power plug (S-1).

( ) The other gray-white to pin 8 of the Power plug (S-1).

( ) Red-red-white to pin 4 of the Power plug (S-1).

( ) Blue-white to terminal 16 in section 5C (S-1).

( ) Two brown to terminal 1 in section 5C (S-2).

( ) Check to see that all wires clear the screw holes in the rear of the chassis near the power and microphone connectors.

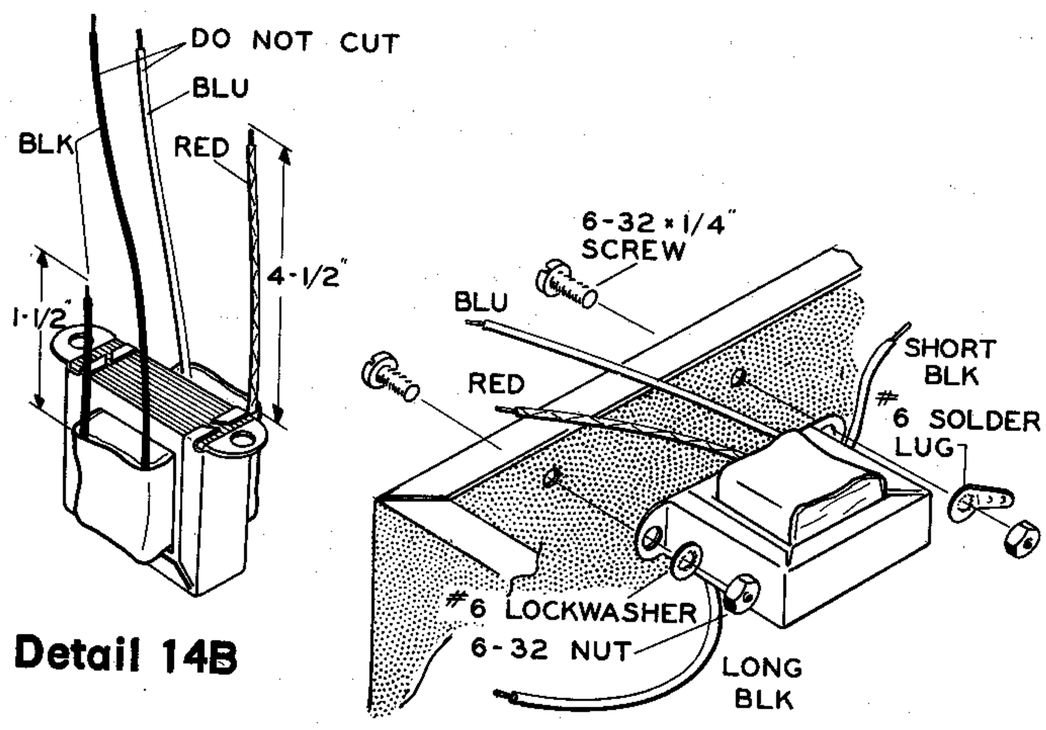

Detail 14B

( ) Locate the output transformer (#51-55). Referring to Detail 14B, cut the indicated black lead to 1-1/2" and the red lead to 4-1/2". Strip 3/4" of insulation from the red lead and 1/4" of insulation from the black lead. Melt a small amount of solder on the exposed lead ends to hold the wire strands together.

( ) T4. Again referring to Detail 14B, install the output transformer at location T4 on the chassis. Use 6-32 x 1/4" screws, a #6 solder lug, a #6 lockwasher, and 6-32 nuts. Position the solder lug as shown.

Connect the output transformer leads as follows:

( ) Short black to the solder lug at the transformer (NS).

( ) Long black to lug 2 of the Spkr socket (S-1).

( ) Red to lug 3 of the Power plug (S-2).

( ) Blue to terminal P in section 4C (S-1).

Connect the cable assembly wires from BO#3 as follows:

( ) Green-green-white to terminal 25 in section 5C (S-1).

( ) Green to terminal 5 in section 5C (S-1).

( ) Red to terminal 2 in section 5C (S-2).

( ) Orange to terminal 3 in section 4B (S-1).

( ) Violet to terminal 7 in section 4C (S-1).

( ) Blue to terminal 6 in section 4C (S-1).

( ) Connect the shield of the shielded cable with the marked end (red dot, stripe, or tape) to lug 1 (S-3) and the inner lead to lug 2 (S-3) of the Rcvr socket.

( ) Connect the shield of the other shielded cable to lug 1 (S-1) and the inner lead to lug 2 (S-1) of the Ant socket.

( ) Yellow-white to lug 2 of the Ext Relay socket (S-2).

Refer to Detail 14C for prewiring the relay to the cable assembly. Setting the chassis up on its side will make the relay wiring easier. To prevent damage to the contacts and springs of the relay, it should be picked up only by its sides. Do not bend the relay lugs.

( ) Strip 1/2" insulation from one end and 1/4" insulation from the other end of a 2-1/2" length of hookup wire. Pass the 1/2" stripped end through lug 8 (S-2) to lug 9 (S-1) of the relay. The other end of this wire will be connnected later.

( ) Connect the inner lead of the shielded cable from BO#4 to lug 10 of the relay (S-1). The shield will be connected later.

Connect the cable assembly wires from BO#5 to the relay as follows:

( ) Yellow to lug 7 (S-1).

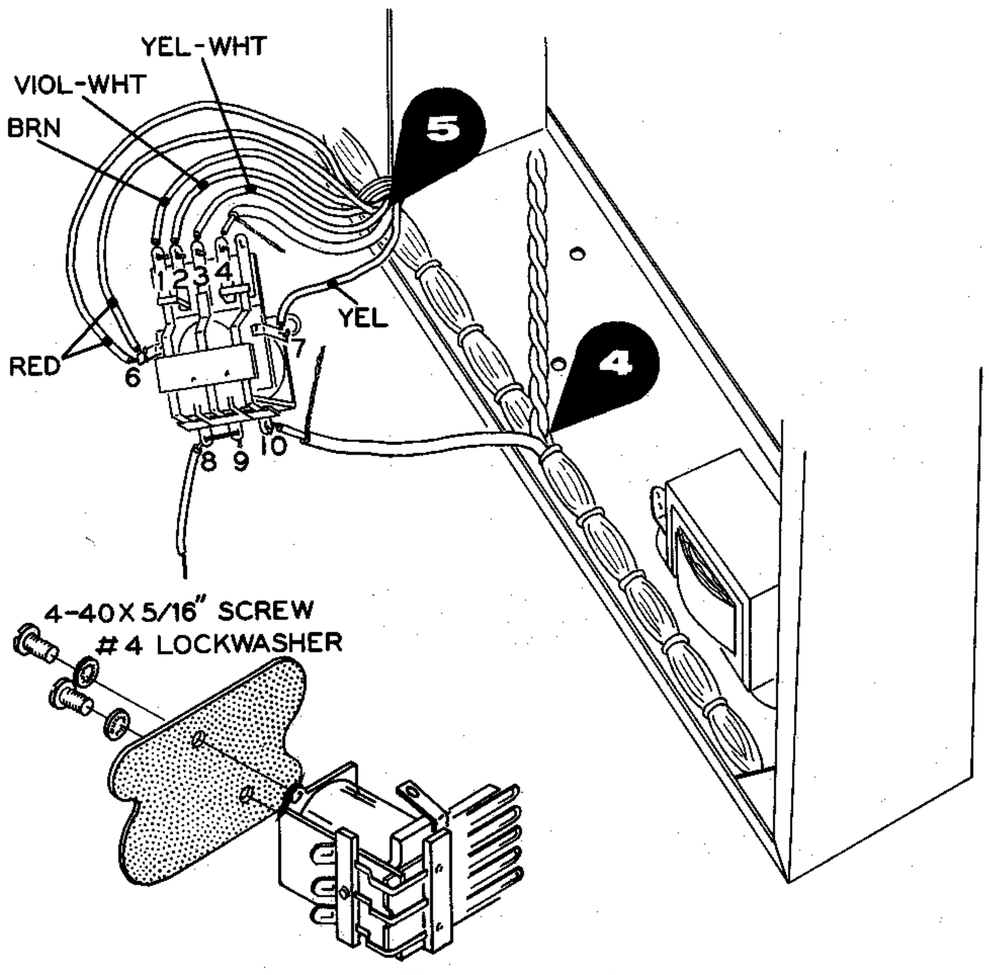

Detail 14C

( ) Connect the inner lead of the shielded cable to lug 4 (S-1). The shield will be connected later.

( ) Carefully position the relay over the mounting holes on the side of the chassis and bend the wires into place. See Pictorial 14.

( ) Referring to Detail 14C, secure the relay to the chassis with 4-40 x 5/16" screws and #4 lockwashers.

( ) Yellow-white to lug 3 (S-1).

( ) Violet-white to lug 2 (S-1).

( ) Brown to lug 1 (S-1).

( ) Both red to lug 6 (S-2).

( ) Connect the free end of the wire from lug 8 of the relay to the solder lug at the output transformer (S-2).

( ) Connect the shield of both shielded cables connected to the relay, to solder lug AC (S-2).

( ) Connect the free end of the wire coming from terminal J in section 5A to lug 5 of the relay (S-1).

( ) Position the shielded cable from BO#4 in the chassis apron away from the circuit board as shown.

Connect the cable assembly wires from BO #4 as follows:

( ) Twist the black-white and brown-white wires together.

( ) Brown-white to terminal 11 in section 4B (S-1).

( ) Black-white to terminal 10 in section 3B (S-1).

( ) Connect the red-red-white wire from BO #5 to terminal 22 in section 5A (S-1).

( ) Connect the two red wires extending from grommet AA, coming from BO#7, to terminal 2 in section 3A (S-2).

( ) Connect the brown-white wire extending from grommet AB, coming from BO#8, to terminal 11 in section 3A (S-2).

( ) Connect the black-white wire extending from grommet AB, coming from BO #8, to terminal 10 in section 1A (S-2).

Connect the cable assembly wires from BO#9 as follows:

( ) Violet-violet-white to terminal 27 in section 2C (S-1).

( ) Black-black-white to terminal 20 in section 1B (S-1).

( ) Yellow to terminal 4 in section 1B (S-1).

( ) Blue-blue-white to terminal 26 in section 1B (S-1).

( ) Orange-white to terminal 13 in section 1B (S-1).

( ) Red to terminal 2 in section 1B (S-2).

( ) Gray-gray-white to terminal 28 in section 1C (S-1).

( ) Turn the chassis over and cut off the excess wire lengths from the terminals.

This completes the wiring of the circuit board. Check to see that all connections are soldered. Shake out any wire clippings. The empty holes are used on other models of the Transceiver and are to remain empty for this model.

NOTE: There are a number of empty holes in the circuit board near tube sockets V13 and V14, which are not used in the 80-Meter version of this Transceiver.

Refer to Pictorial 15 for the following steps.

( ) Referring to the inset drawing of Pictorial 15, temporarily install a control solder lug on the Function switch (#63-330), using a control nut. Position the control solder lug so it is on the side of the switch away from the red dot.

Prewire the Function switch as follows:

( ) Strip 1" of insulation from one end of a 3" length of hookup wire. Connect the stripped end of this wire between lug 7 (S-1) and the control solder lug (NS).

( ) Strip 1/4" insulation from the other end of the wire and connect it to lug 3 (S-1).

( ) Connect the hookup wire extending from grommet AA, coming from terminal H in section 4A, to lug 2 (S-1).

Connect the cable assembly wires from BO#6 to the Function switch as follows:

( ) Orange-white through lug 12 (S-2) to lug 1 (S-1). Use sleeving between the two lugs.

( ) Gray to lug 4 (S-1).

( ) Blue-blue-white to lug 5 (S-1).

( ) Green-white to lug 6 (S-1).

( ) Yellow-yellow-white to lug 11 (S-1).

( ) White through lug 8 (S-2) to lug 9 (S-1).

( ) Connect one end of the red-white wire cut from the cable assembly to lug 10 (S-1). The other end will be connected later.

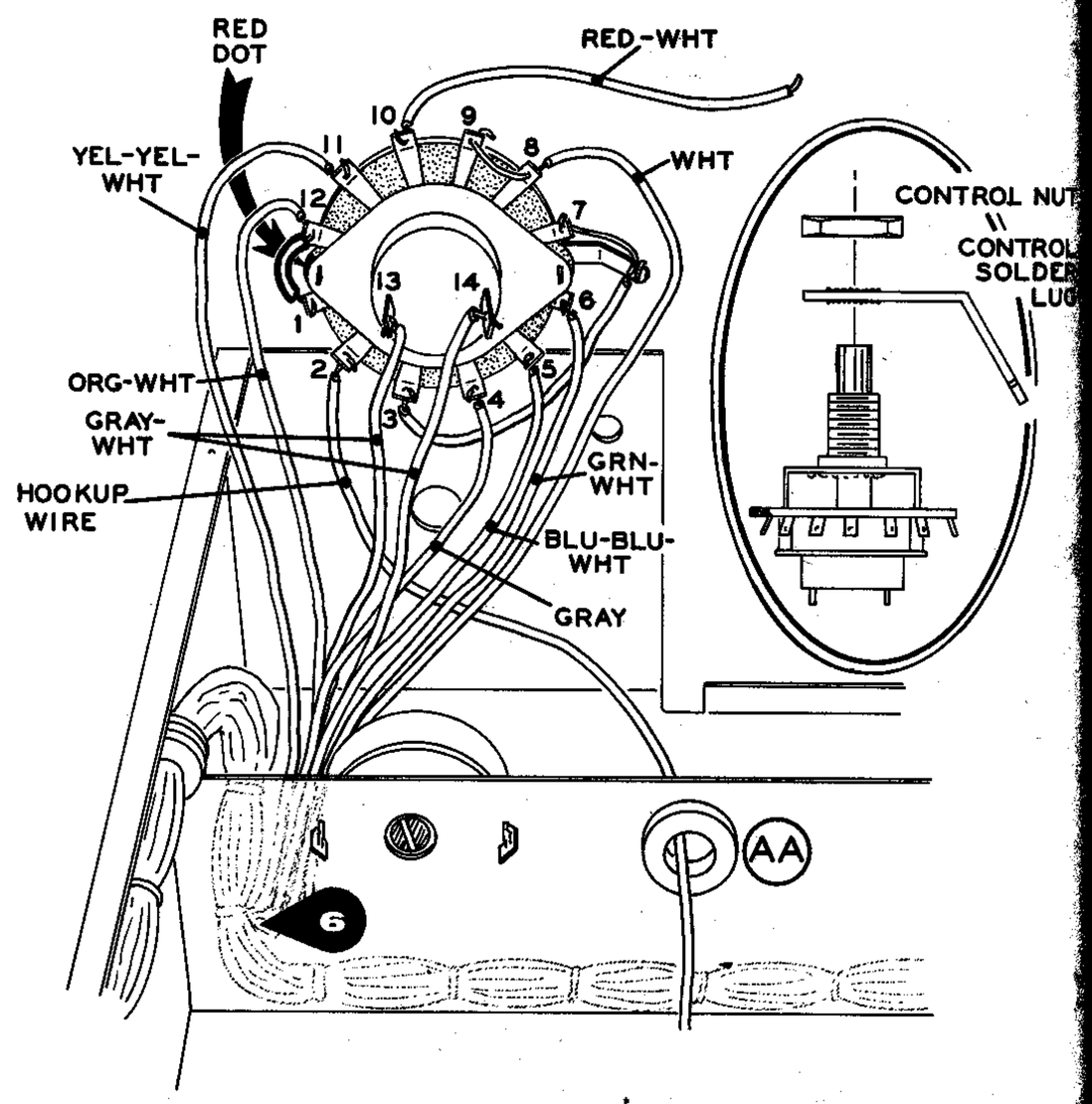

PICTORIAL 15

( ) Connect one of the gray-white wires to lug 13 (S-1) and the other gray-white wire to lug 14 (S-1).

This completes the prewiring of the Function switch. Check it carefully for any errors and see that all lugs are soldered, except the control solder lug.

( ) Remove the control nut from the Function switch. Position the switch in its mounting hole of the chassis. Rotate the switch slightly so the solder lug clears the S Meter Adj hole next to the switch. Press the wires down into the chassis. See Detail 16B on Page 32.

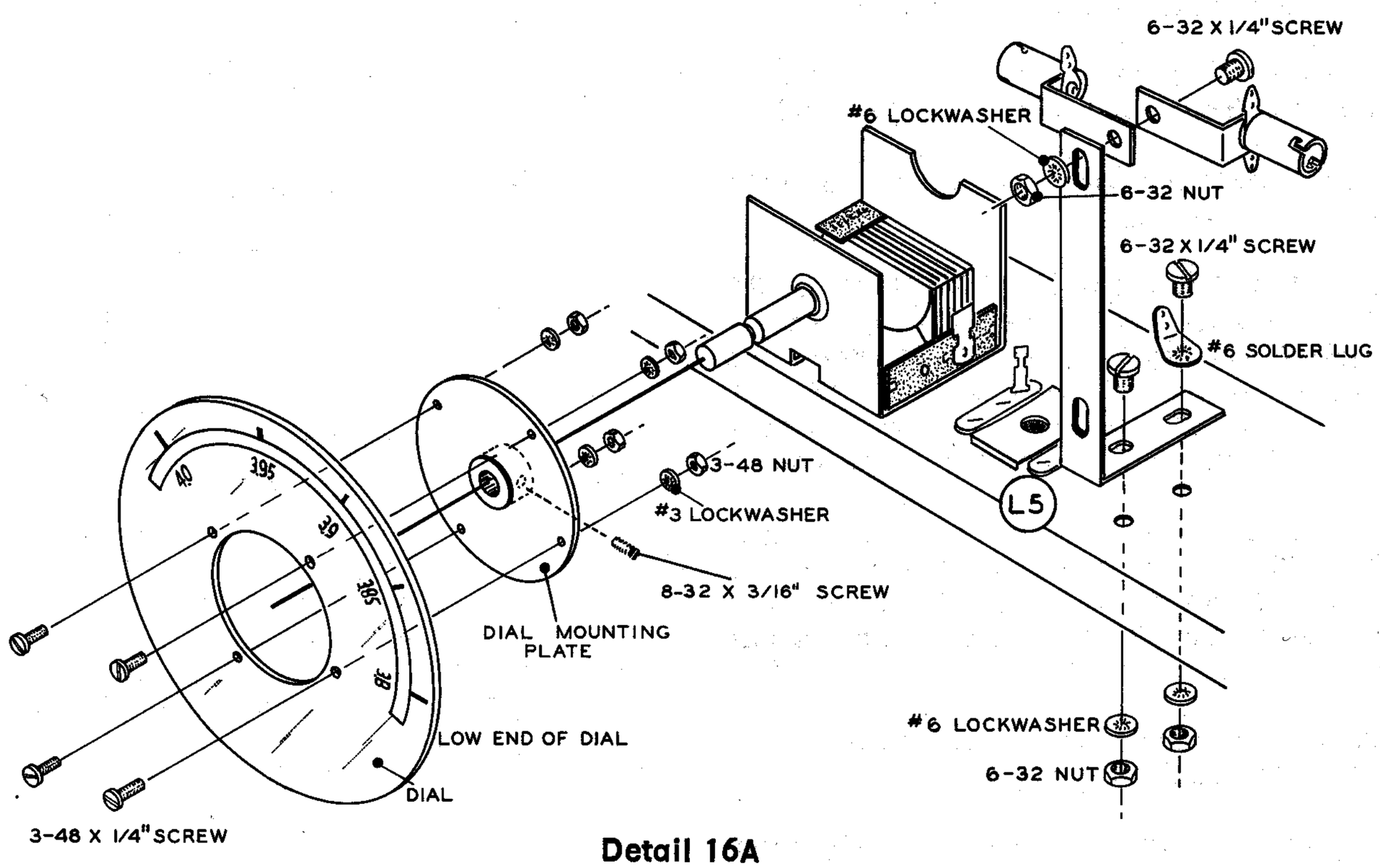

Detail 16A

Refer to Detail 16A for the following steps.

(✓) Install the pilot lamp mounting bracket to the chassis, using 6-32 x 1/4" screws, a #6 solder lug, #6 lockwashers, and 6-32 nuts. Position the solder lug against lug 1 of coil L5.

( ) Mount the pilot lamp sockets to the pilot lamp mounting bracket, using a 6-32 x 1/4" screw, #6 lockwasher, and a 6-32 nut.

(✓) Install the calibrated dial on the dial mounting plate, using 3-48 x 1/4" screws, #3 lockwashers, and 3-48 nuts. Position the "low-end" dial calibration marking (3.8) as shown, with respect to the setscrew hole in the dial mounting plate.

(✓) Start the 8-32 x 3/16" setscrew into the hole of the dial mounting plate.

(✓) Slide the dial assembly onto the VFO capacitor shaft. Do not tighten the setscrew at this time.

Set the chassis aside temporarily.

Refer to Pictorial 16 for the following steps.

(✓) Place a soft cloth on the work area to protect the front panel from being scratched.

(✓) Locate the front panel and position it on the work area as shown.

(✓) Install a 10 KΩ control (#10-131) at the RF Gain location, using two control nuts, a control lockwasher, and a control flat washer. Turn the first nut 5/16" onto the control bushing before installing the control. Position the control lugs as shown.

(✓) Install the 500 KΩ control with switch (#19-66) at the AF Gain location. Use a control lockwasher, control flat washer, and a control nut. Position the control lugs as shown.

(✓) Install the slide switch at the meter switch location, using 6-32 x 1/4" screws.

(✓) Carefully unpack the meter (#407-99) from its box, and remove the shorting wire from between the meter terminals.

(✓) Install the meter, using the lockwashers and nuts supplied with the meter.

Refer to Detail 16B for the following steps.

(✓) Mount the front panel to the chassis, using a control flat washer and a control nut on the Function switch. Do not tighten.

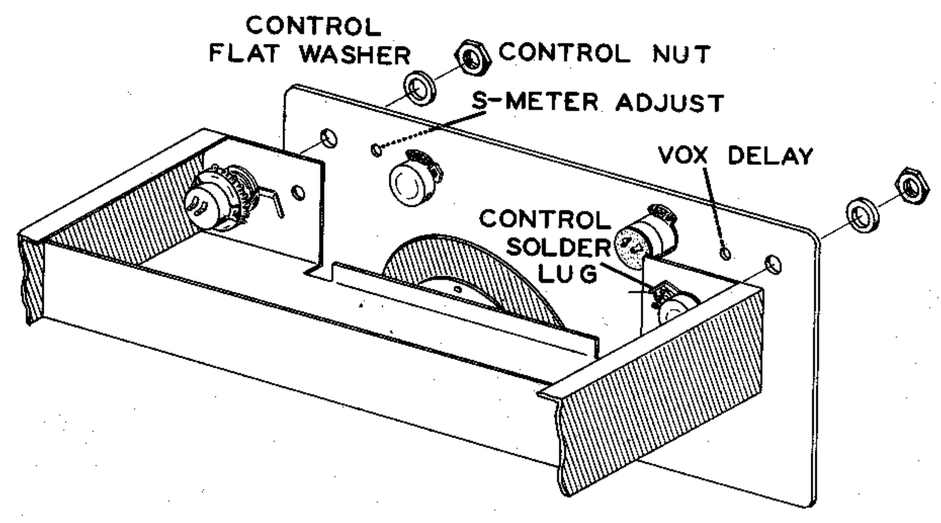

Detail 16B

( ) Install a 1 megohm control (#10-67) at the VOX location, using a control solder lug, control flat washer, and a control nut. Do not tighten the control nut. Position the control lugs as shown. Be sure the solder lug clears the VOX Delay hole next to the control.

(✓) Center the front panel properly with respect to the Final Tune capacitor shaft, and then tighten the two control nuts.

Refer to Pictorial 17 for the following steps.

(✓) Connect the red-white wire coming from lug 10 of the Function switch to lug 2 of the S Meter Adj control (NS).

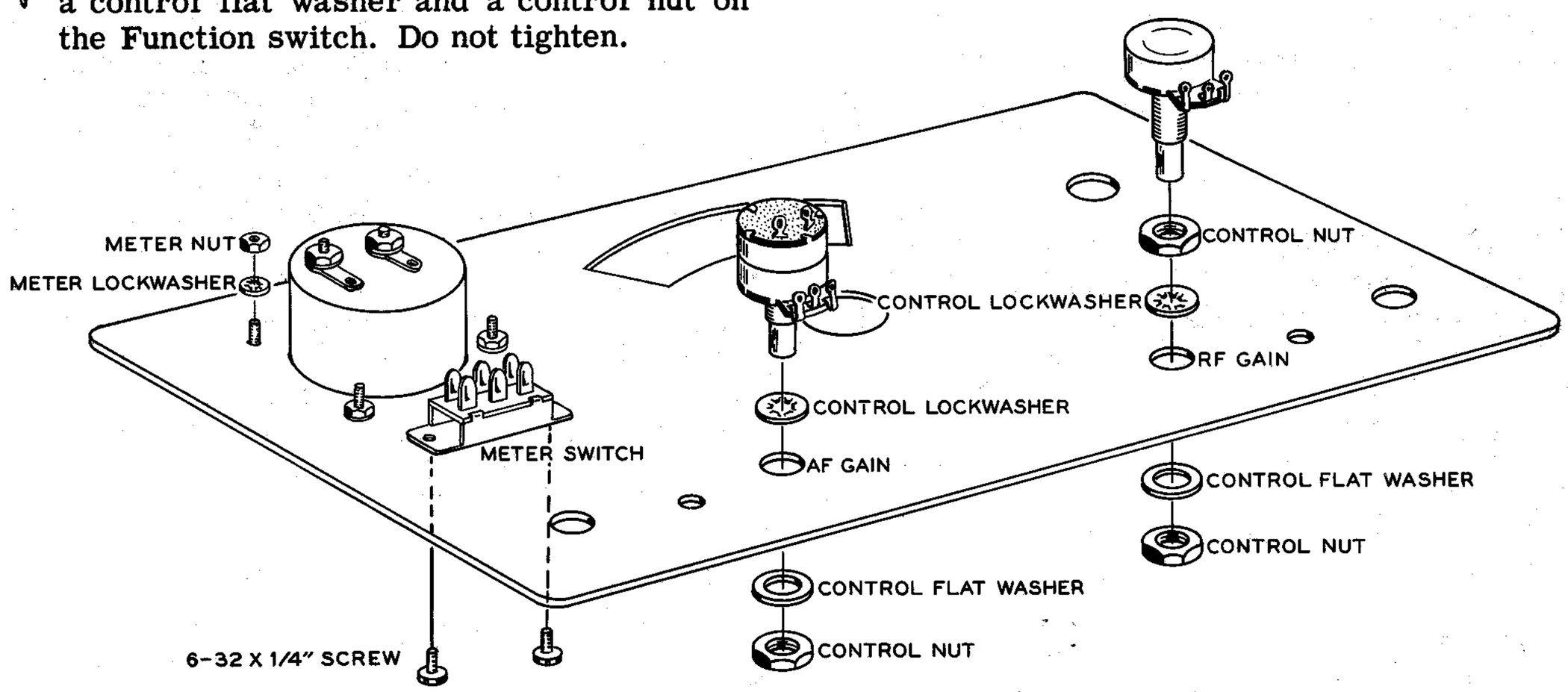

PICTORIAL 16

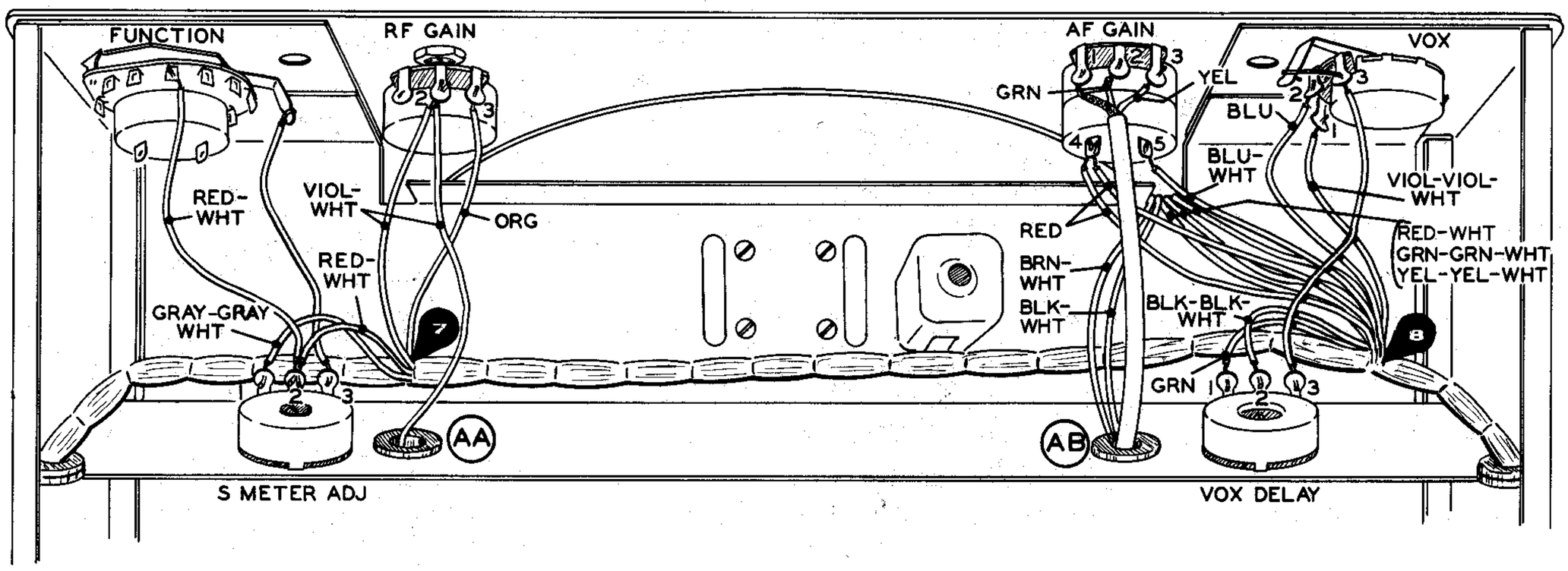

PICTORIAL 17

(✓) Connect a 2-1/2" length of hookup wire from lug 3 of the S Meter Adj control (S-1) to the Function switch control solder lug (S-3).

(✓) Connect the violet-white wire extending from grommet AA, coming from terminal 17 in section 4A, to lug 2 of the RF Gain control (NS).

Connect the cable assembly wires from BO#7 as follows:

(✓) Gray-gray-white to lug 1 of the S Meter Adj control (S-1).

(✓) Red-white to lug 2 of the S Meter Adj control (S-2).

(✓) Violet-white to lug 2 of the RF Gain control (S-2).

(✓) Orange to lug 3 of the RF Gain control (S-1).

( ) Pass the red-white, green-green-white, and yellow-yellow-white wires of BO#8 up to the top of the chassis, along with the black-white and brown-white wires from grommet AB.

Connect the cable assembly wires from BO#8 as follows:

(✓) Both red to lug 4 of the AF Gain control (S-2).

(✓) Blue-white to lug 5 of the AF Gain control (S-1).

(✓) Green to lug 1 of the VOX Delay control (S-1).

(✓) Black-black-white to lug 2 of the VOX Delay control (S-1).

(✓) Violet-violet-white to lug 1 of the VOX control (S-1).

(✓) Blue to lug 2 of the VOX control (S-1).

( ) Strip 1" of insulation from one end of a 3-1/2" hookup wire and 1/4" from the other end. Pass the 1" stripped end through lug 3 (S-2) to the control solder lug (S-1) of the VOX control. Connect the other end of this wire to lug 3 of the VOX Delay control (S-1).

Connect the free end of the 2-conductor shielded cable extending from grommet AB to the AF Gain control as follows:

(✓) Shield to lug 1 (S-1).

(✓) Green to lug 2 (S-1).

(✓) Yellow to lug 3 (S-1).

This completes the wiring of the bottom of the chassis. Be sure all connections are soldered, and shake out any wire clippings or solder splashes.

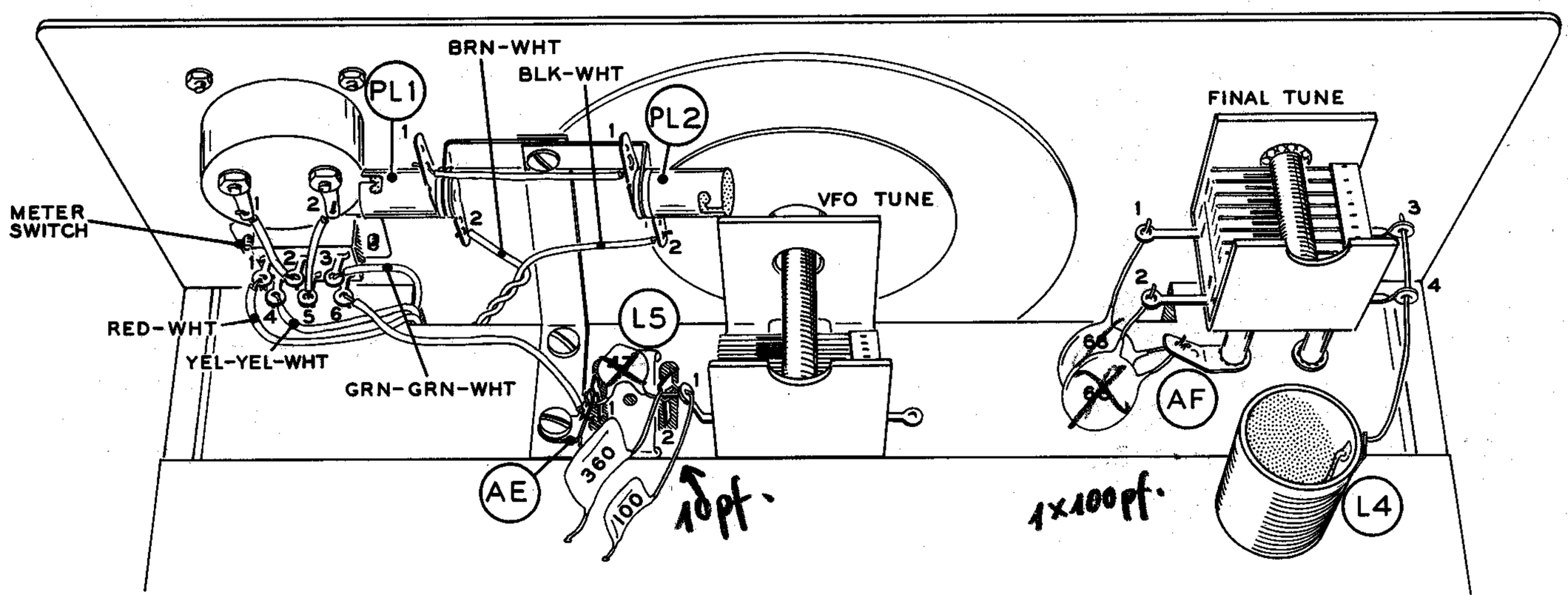

PICTORIAL 18

CHASSIS WIRING-TOP

Refer to Pictorial 18 for the following steps.

Connect the free ends of the cable assembly wires coming from under the chassis as follows:

(✓) Red-white to lug 1 of the Meter switch (S-1).

(✓) Yellow-yellow-white to lug 4 of the Meter switch (S-1).

(✓) Green-green-white to lug 3 of the Meter switch (S-1).

(✓) Loosely twist the black-white and the brown-white wires together.

(✓) Brown-white to lug 2 of pilot lamp socket PL1 (S-1).

(✓) Black-white to lug 2 of pilot lamp socket PL2 (S-1).

(✓) Connect a 2" hookup wire from lug 2 of the Meter switch (S-1) to lug 1 of the Meter (S-1).

(✓) Connect a 2-1/4" hookup wire from lug 5 of the Meter switch (S-1) to lug 2 of the Meter (S-1).

(✓) Connect a 3" hookup wire from lug 6 of the Meter switch (S-1) to lug 1 of coil L5 (NS).

(✓) Connect a 2" hookup wire from lug 1 of pilot lamp socket PL1 (S-1) to lug 1 of pilot lamp socket PL2 (S-1).

(✓) C130. Connect a ~~47~~ 10 $\mu\mu$f disc capacitor between lugs 1 (S-3) and 2 (NS) of coil L5. Be sure solder lug AE is soldered to lug 1 of coil L5.

(✓) Pass the free lead of the 100 $\mu\mu$f mica capacitor, coming from the circuit board, through lug 1 of the VFO capacitor (S-2) to lug 2 of coil L5 (NS). Be sure the leads are clear of the circuit board mounting screw.

(✓) Connect the free lead of the 360 $\mu\mu$f mica capacitor, coming from the circuit board, to lug 2 of coil L5 (S-3).

(✓) C76. Connect a ~~68~~ 100 $\mu\mu$f disc capacitor from lug 1 of the Final Tune capacitor (S-1) to solder lug AF (NS).

( ) C66. Connect a 68 $\mu\mu$f disc capacitor from lug 2 of the Final Tune capacitor (S-1) to solder lug AF (S-2).

(✓) Twist lugs 3 and 4 of the Final Tune capacitor 90 degrees.

(✓) Pass the free lead from the top of coil L4 through lug 4 (S-2) to lug 3 (S-1) of the Final Tune capacitor.

This completes the wiring of the Transceiver. Check to see that all connections are soldered, and shake out any wire clippings or solder splashes. There will be a 1000 $\mu\mu$f capacitor remaining. This capacitor is for use in loading the antenna if needed, as shown in Figures 8A and 8B on Page 47.

(✓) Referring to Detail 18A, install pointer knobs on the Final Tune, Function, RF Gain, AF Gain, and VOX shafts. With the shafts turned fully counterclockwise, the pointers of the knobs should be aligned with the most counterclockwise marking on the front panel; the AF Gain control knob setscrew should be tightened against the flat of the shaft.

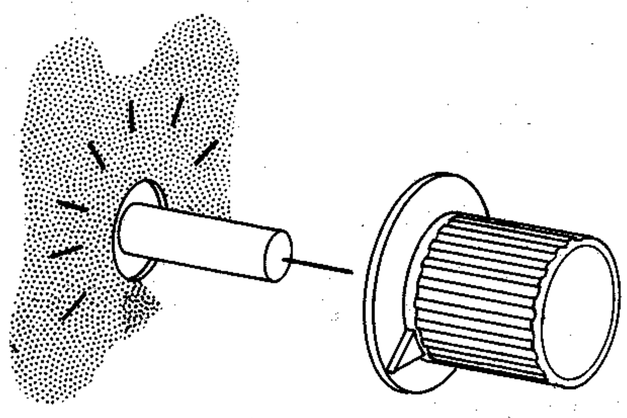

Detail 18A

(✓) Install the large knob on the shaft of the VFO capacitor.

INITIAL TEST

Before installing the tubes or pilot lamps, the following resistance checks should be performed. If the actual resistance readings vary more than ±20% from those listed, refer to the In Case Of Difficulty section of the manual on Page 50.

Set the controls and switches as indicated at the top of the resistance chart. Connect the common test lead of an ohmmeter to the chassis and make the checks listed in the following chart.

NOTE: The internal wiring of most ohmmeters is such that the positive terminal of the ohmmeter battery is connected to the positive (red) test lead, and the negative battery terminal is connected to the negative (black) test lead. In some ohmmeters, this wiring is reversed and erroneous readings will be obtained when making these measurements. Try reversing the ohmmeter test leads if the measurements do not check out correctly the first time.

Refer to Pictorial 19 (fold-out from Page 47) for the locations of the test points.

Set the controls as follows:

FUNCTION Switch: OFF.
Meter Switch: BIAS SET.
All other controls: Fully counterclockwise.

RESISTANCE CHART

TEST POINT	RESISTANCE
Power Plug pin 1	30 KΩ
Power Plug pin 2	0 Ω
Power Plug pin 3	50 KΩ (10 KΩ)*
Power Plug pin 4	Infinity
Power Plug pin 5	Infinity
Power Plug pin 6	Infinity
Power Plug pin 7	1000 Ω
Power Plug pin 8	Infinity

TEST POINT	RESISTANCE
28 in section 1C	10 KΩ
A in section 1C	200 Ω to 500 Ω
B in section 3B	250 KΩ
C in section 1A	3300 Ω
13 in section 1B	220 Ω
Tube socket V4 pin 7	330 Ω
Tube socket V5 pin 1	150 Ω
Tube socket V5 pin 2	200 KΩ

*With OPTIONAL resistors installed.

TEST POINT	RESISTANCE
Tube socket V6 pin 3	75 KΩ
Tube socket V9 pin 1	1.25 megohm
Tube socket V12 pin 8	40 KΩ (20 KΩ)*
Tube socket V12 pin 6	120 Ω
Tube socket V1 pin 9	1 to 2 megohm (adjusts with MIC GAIN control)
Tube socket V10 pin 1	2 megohm
Tube socket V2 pin 9	20 megohm
6 in section 4C	0 to 1 megohm (adjusts with VOX control)
9 in section 2C	20 KΩ
Mic #1	10 megohms minimum
Mic #2	20 megohm
16 in section 5C	Infinity with AF GAIN switch "in," 50 KΩ (10 KΩ)* with AF GAIN switch "out,"

Set the FUNCTION switch to PTT.

Tube socket V10 pin 1	0 Ω
Tube socket V2 pin 9	20 megohm
9 in section 2C	0 Ω
Mic #2	20 megohm

Set the FUNCTION switch to VOX.

Tube socket V10 pin 1	2 megohm
Tube socket V2 pin 9	25 megohm
9 in section 2C	0 Ω
Mic #2	20 megohm

Set the FUNCTION switch to TUNE.

*With OPTIONAL resistors installed.

TEST POINT	RESISTANCE
Tube socket V10 pin 1	2 megohm
Tube socket V2 pin 9	0 Ω
9 in section 2C	0 to 20 KΩ (adjust with TUNE LEVEL control)
Mic #2	0 Ω

Set the FUNCTION switch to PTT and the Meter switch to OPERATE TUNE.

NOTE: Use the OHMS x 100 scale. Just touch the test point and note that the S meter deflects; do not attempt to measure the resistance.

13 in section 1B	S Meter deflects (direction depends upon ohmmeter polarity)

Set the FUNCTION switch to TUNE and use the OHMS x 100 scale.

H in section 4A	S Meter deflects

Set the FUNCTION switch to PTT and the Meter switch to BIAS SET. Use the OHMS x 1 scale.

25 in section 5C	Meter deflects (opposite direction)

Set the FUNCTION switch to OFF.

SPKR jack	0.4 Ω
RELAY jack	Infinity, then press relay for 0 Ω
ANT jack	0.4 Ω, then press relay for 10 KΩ
RCVR jack	0.1 Ω
1 in section 1C	15 KΩ, then press relay for 0 Ω
3 in section 4B	0 to 10 KΩ (adjusts with RF GAIN control) then press relay 100 KΩ

This completes the Initial Tests. If all resistance readings were in agreement with the chart (or within ±20%), install the tubes in their proper sockets, and the pilot lamps in the pilot lamp sockets. See Pictorial 19 (fold-out from Page 47). Position pilot lamp socket PL1 so the lamp clears the meter.

CAUTION: When installing the tubes, support the circuit board from underneath with a finger to prevent circuit board damage.

POWER SUPPLY

The Transceiver is designed and wired to operate with the Heath Model HP-13 (12 V DC) Power Supply, and the Model HP-23 (120 V AC) Power Supply.

Other power supplies may be used, however, their use may require one or more of the OPTIONAL changes to the Transceiver circuit board to provide proper screen voltage to the output tubes. The older Heath Model HP-20 (120 VAC Power Supply with proper termination of the power cable, and the Model HP-10 (12 V DC) Power Supply with slight modification can also be used with the Transceiver. These two Power Supplies will be discussed later.

NOTE: Connectors are supplied for connecting the power supply cables to the Transceiver.

HEATH HP-13 POWER SUPPLY

Referring to Figure 1A, wire the octal socket (with cap) of the Transceiver to the Power Supply cable as follows:

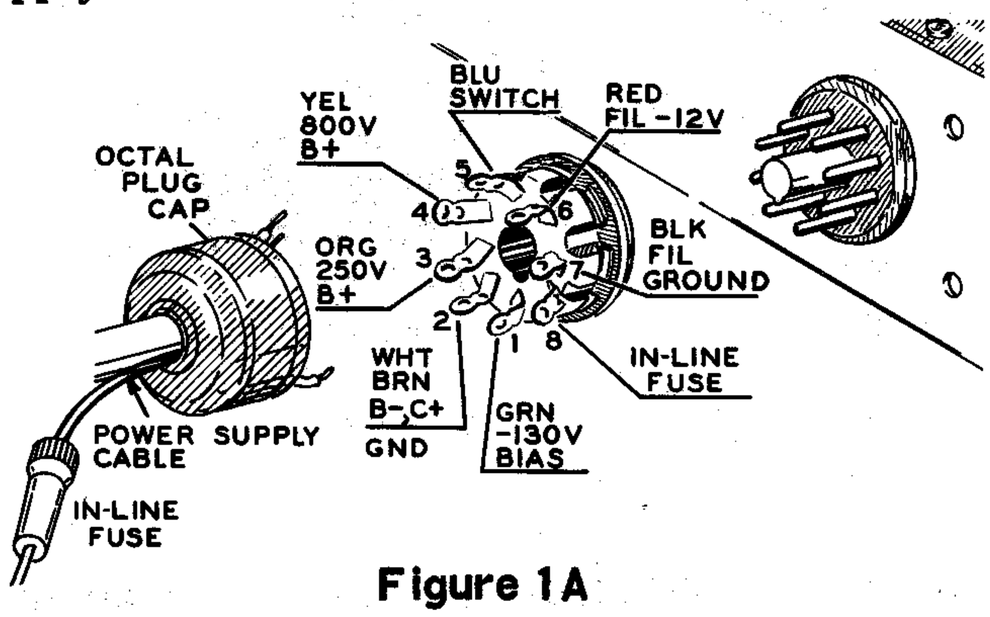

Figure 1A

SOCKET PIN#	CABLE WIRE COLOR
1	Green - Bias (-130 V)
2	White and Brown - Ground (B-, C+)
3	Orange - B+ (250 V low tap)
4	Yellow - B+ (800 V)
5	Blue - Switch
6	Red - Filament (12 V DC)
7	Black - Filament (ground)
8	In-line fuse lead

The other end of the cable should be connected to the 15-pin plug as directed in the Power Supply manual.

HEATH HP-23 POWER SUPPLY

Referring to Figure 1B, wire the octal socket (with cap) of the Transceiver to the Power Supply cable as follows:

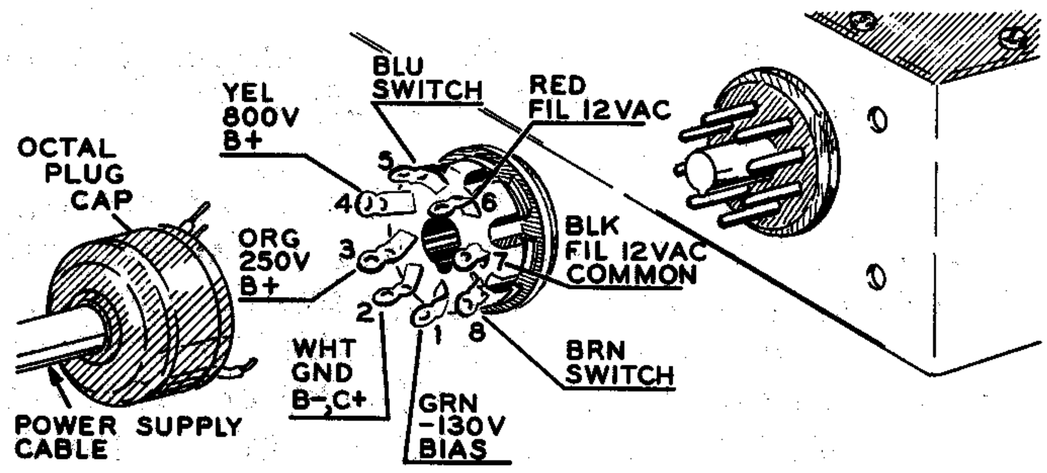

Figure 1B

SOCKET PIN#	CABLE WIRE COLOR
1	Green - Bias (-130 V)
2	White - Ground (B-, C+)
3	Orange - B+ (250 V low tap)
4	Yellow - B+ (800 V)
5	Blue - Switch
6	Red - Filament (12 V AC)
7	Black - Filament common (12 V AC)
8	Brown - Switch

The other end of the cable should be connected to the 11-pin plug as directed in the Power Supply manual.

HEATH HP-20 POWER SUPPLY

The HP-20 Power Supply can be used as is, without modification. The octal socket with cap should be wired on the Transceiver end of the power cable according to Figure 1B. An octal plug with cap should be wired to the Power Supply end of the cable, using the same wire colors and pin numbers called out in Figure 1B. Be sure to use the correct pin numbers, as molded into the plug, and to install the OPTIONAL resistors in the Transceiver.

NOTE: The OPTIONAL resistors mentioned below are not supplied in the kit. These resistors can be obtained from a local parts supplier.

1. Remove the long jumper in section 4A of the Transceiver circuit board.

2. Install a ~~100~~ 1000 Ω 4 to 7 watt resistor and a 10 KΩ 7 to 10 watt resistor at the OPTIONAL locations in section 4A of the circuit board. These resistors should be placed about 1/4" above the circuit board to prevent heat damage to the board. Use 1/2" of sleeving on each lead.

3. Install the short OPTIONAL jumper at V in section 4A of the circuit board.

When wired in this manner, the Transceiver will not turn the Power Supply On or Off, therefore, the Power Supply switch must be used for this purpose. Turning the Transceiver FUNCTION switch to the OFF position will leave the Transceiver turned On, as in the TUNE position.

If you wish, the HP-20 can be modified as follows so that it can be switched On and Off with the FUNCTION switch of the Transceiver.

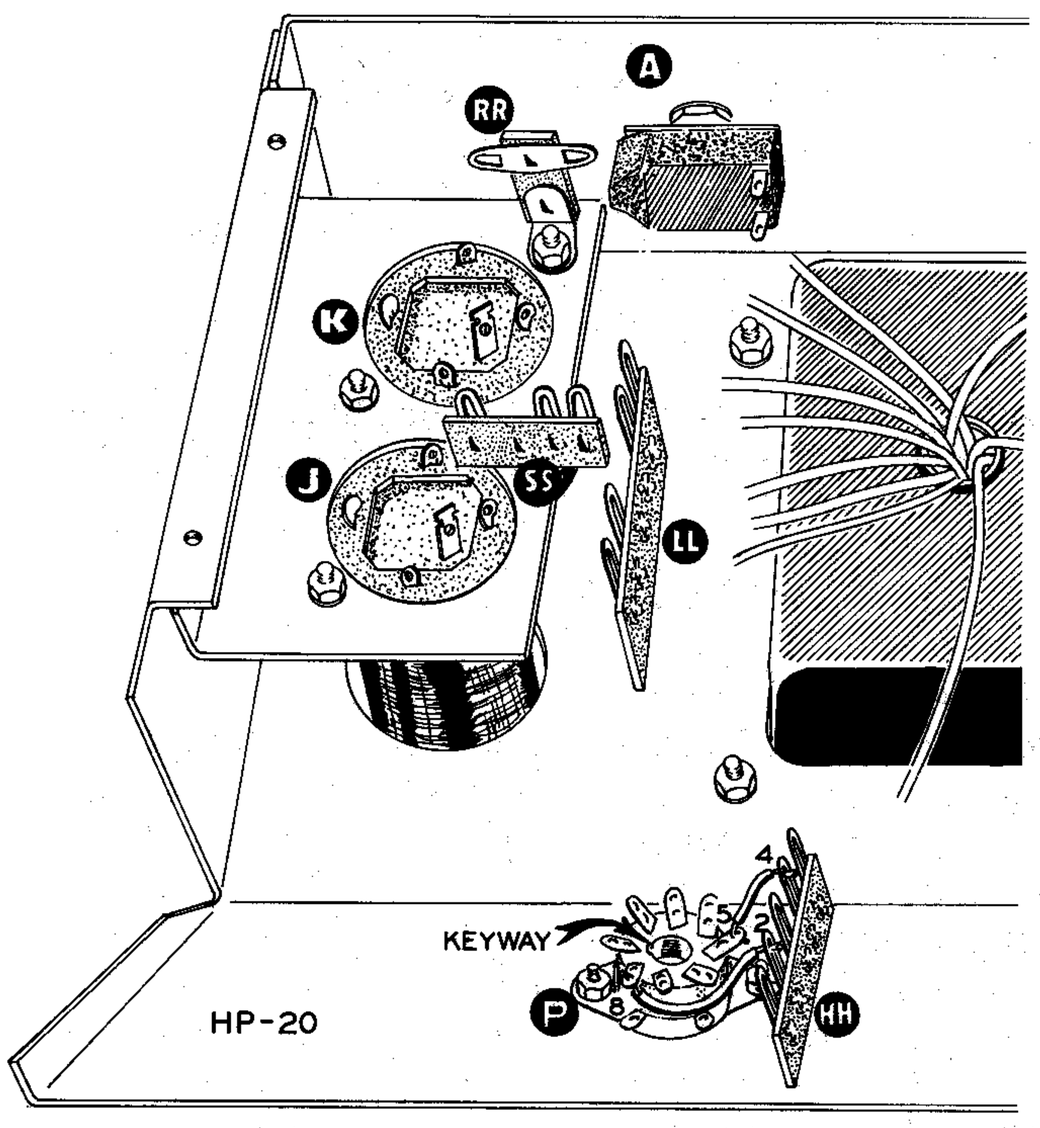

Figure 2

Refer to Figure 2 for the following steps.

1. Connect a short wire from lug 2 of terminal strip HH (S-5) to lug 8 of socket P (S-1).

2. Connect a short wire from lug 4 of terminal strip HH (S-4) to lug 5 of socket P (S-1).

Now the switch of either the Transceiver or the Power Supply will turn the Power Supply On and Off. The switch of the Power Supply should be left in the Off position at all times; use the Transceiver FUNCTION switch to switch the system On and Off.

If the HP-20 Power Supply is alternately used with another piece of equipment, its On-Off switch will function normally if pins 5 and 8 of the power cable connector at the Power Supply are not used.

HEATH HP-10 POWER SUPPLY

Connect the octal socket with cap to the Transceiver end of the power cable according to Figure 1.

Connect an octal plug with cap to the Power Supply end of the power cable as follows:

PLUG PIN#	CABLE WIRE COLOR
1	Green (S-1)
2	White (S-1)
3	Orange (S-1)
4	Yellow (S-1)
5	Red (S-1)
6	No connection
7	Blue and Black (S-2)
8	Brown (S-1)

NOTE: The OPTIONAL resistors mentioned below are not supplied in the kit. These resistors can be obtained from a local parts supplier.

1. Remove the long jumper in section 4A of the Transceiver circuit board.

2. Install a 1000 Ω 4 to 7 watt resistor and a 10 KΩ 7 to 10 watt resistor at the OPTIONAL locations in section 4A of the circuit board. These resistors should be placed about 1/4" above the circuit board to prevent heat damage to the board. Use 1/2" of sleeving on each lead.

3. Install the short OPTIONAL jumper at V in section 4A of the circuit board.

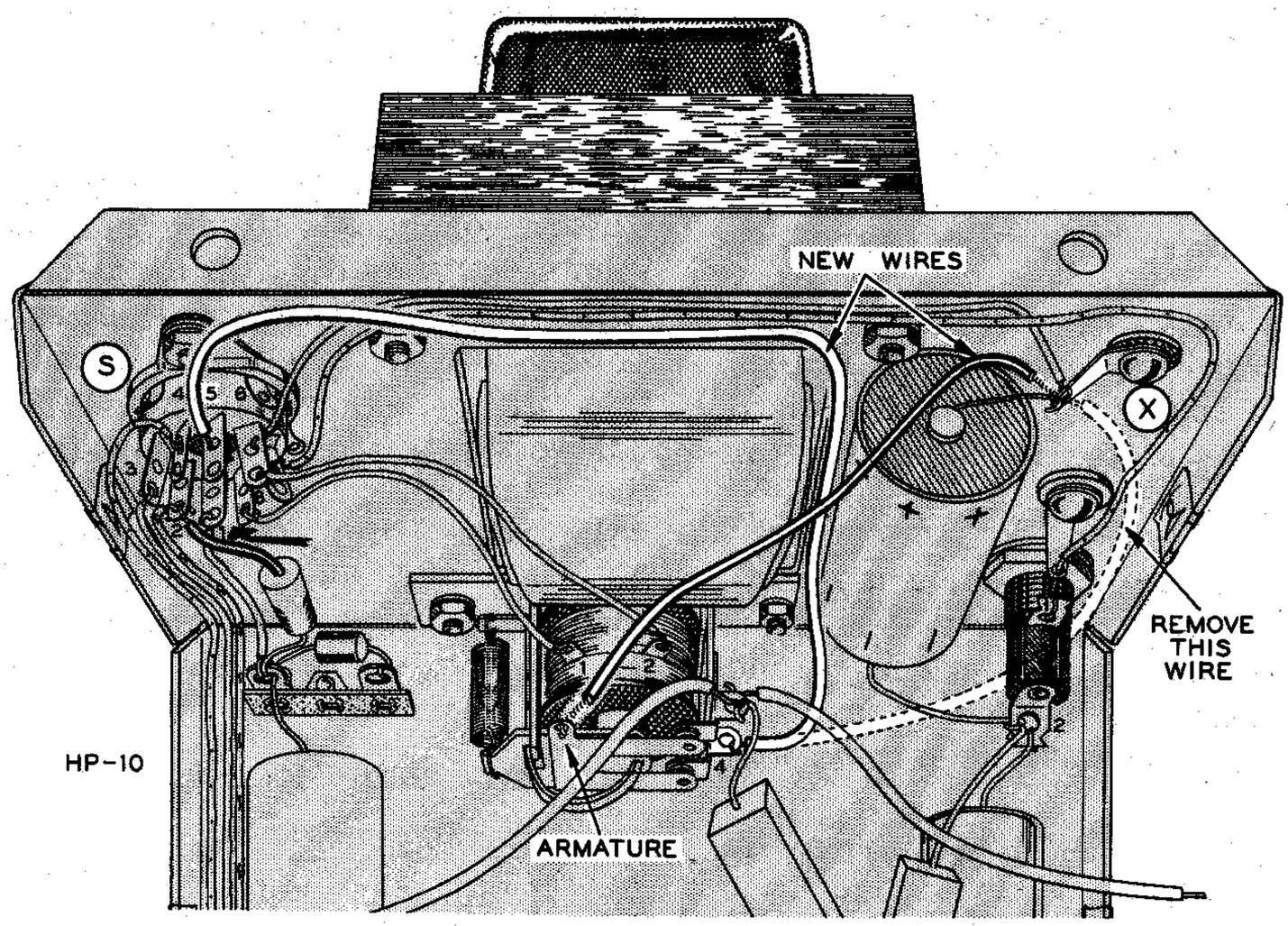

Figure 3

The following modifications must be made to permit the Transceiver FUNCTION switch to turn the Power Supply On and Off. This modification does not alter the Power Supply circuit for use with other equipment. Refer to Figure 3.

1. Remove the Power Supply bottom plate.

NOTE: It may be easier to make the following wiring changes if the heat sink closest to the fuseholder is removed. Mark the lead colors on the heat sink next to the terminals from which the leads are disconnected, so they can be reconnected properly. Be careful not to lose any of the insulating washers.

2. Remove the wire connected between lug 4 of the relay and solder lug X.

3. Connect a length of #18 hookup wire from lug 4 of the relay (S-1) to lug 5 of socket S (S-1).

4. Connect a flexible wire from the armature of the relay (S-1) to solder lug X (S-3). This wire must be flexible enough to permit proper operation of the relay, yet be heavy enough to carry the necessary current. A length of braid from a piece of shielded cable, with sleeving on it, should be satisfactory. Position this wire away from the other wires to permit free operation of the relay.

5. Replace the heat sink (if it was removed) and be sure to replace the insulating washers properly. Reconnect the heat sink leads.

6. Replace the bottom plate.

7. Because the filament current now flows through the Power Supply fuse, it should be replaced with one rated at 20 amperes.

NOTE: The HP-10 and HP-20 power cables are electrically quite different from each other, and if they are interchanged, the Transceiver will not operate properly. It is suggested these cables be marked for easy identification.

POWER SUPPLY SOURCE CURRENT CONSIDERATIONS

NOTE: The information in this section does not apply to the Heath Models HP-13 and HP-23 Power Supplies.

When using an AC power supply where primary current is of little concern, or when the Transceiver is used with a linear amplifier, the small OPTIONAL jumper should be installed in section 4A of the circuit board.

Where conservation of primary current is important, such as in mobile use, about 1 ampere of current can be saved when operating in the receive mode by making the following changes, if the OPTIONAL resistors have been installed.

( ) Remove the short OPTIONAL jumper in section 4A of the circuit board. Connect one end of a wire to point V on the foil side of the circuit board. Pass this wire through grommet AA and along the cable assembly to the relay. Connect the wire end to lug 3 of the relay, with the yellow-white wire of the relay. With the relay wired in this manner, bleeder current will flow only when the Transceiver is operated in the transmit mode. However, the Ext Relay jack can no longer be used to control an external circuit, such as a linear amplifier, therefore, this modification is not always practical.

ALTERNATE POWER SUPPLY CONSIDERATION

Power supplies other than those previously mentioned may be used with the Transceiver. The power supply used must meet the requirements listed in the Specifications of this manual, with the following possible exception: If the power supply meets all requirements except that its B+ screen voltage is too high (275 to 325 volts), the following changes can be made on the Transceiver circuit board. These changes will provide the proper screen voltage to tubes V5, V6, and V7. NOTE: The OPTIONAL resistors mentioned below are not supplied in the kit. These resistors can be obtained from a local parts supplier.

1. Remove the long jumper in section 4A of the circuit board.
2. Install a 1000 Ω 4 to 7 watt resistor and a 10 KΩ 7 to 10 watt resistor at the OPTIONAL locations in section 4A of the circuit board. These resistors should be placed about 1/4" above the circuit board to prevent heat damage to the board. Use 1/2" of sleeving on each lead.
3. Install the short OPTIONAL jumper at V in section 4A of the circuit board. NOTE: Be sure the power cable of the power supply has #18 or larger wire for the filament circuit. All other wires can be as small as #22 wire.

ALIGNMENT AND ADJUSTMENT

Refer to Pictorial 19 (fold-out from Page 47) for the following steps.

Set the controls as follows:

RF GAIN: fully clockwise.

VOX, VOX DELAY, AF GAIN, and TUNE LEVEL: half rotation.

FINAL BIAS and MIC GAIN: fully counterclockwise.

Meter Switch: BIAS SET.

FUNCTION switch: OFF.

Using an ohmmeter, make the following resistance checks at the Power plug:

Pin 1: 30 KΩ
Pin 3: 50 KΩ (10 KΩ when using OPTIONAL resistors)
Pin 4: Infinity

If any of these resistance readings vary more than ±20%, refer to the In Case Of Difficulty section of the manual before proceeding.

RECEIVER ALIGNMENT

NOTE: Phono plugs are provided for making connections to the sockets on the rear of the Transceiver.

Connect an 8 Ω speaker (a 3.2 Ω to 16 Ω speaker may be used with reduced efficiency) to the SPKR socket, and a 50 Ω dummy load to the ANT socket. With the power supply wired according to the instructions in the Power Supply section of the Manual, connect it to the Transceiver Power plug. Make sure the VOX DELAY control is at the center of its rotation.

1. Turn the FUNCTION switch to PTT. The pilot lamps and the tube filaments should light. Watch to see that the meter remains at zero; if it should start to deflect, the Transceiver should be turned off immediately, as the bias circuit of tube stages V6 and V7 is probably shorted and must be corrected before proceeding.

2. Place the Meter switch in the OPERATE TUNE position and adjust the S METER ADJ control for a zero indication on the meter.

3. Remove the dummy load from the ANT socket and plug an antenna into the ANT socket.

4. Turn up the AF GAIN control until noise is heard in the speaker. Tune up and down the band with the VFO. Stations should be heard if there is any local activity.

5. Tune in a station that gives approximately a midscale (S9) meter reading.

6. Adjust the top and bottom slugs of receiver IF transformer T3 for the highest meter reading. Use the short end of the alignment tool for the top slug, and the long end of the alignment tool for the bottom slug. When passing the long end of the alignment tool through the top slug to reach the bottom slug, be careful not to disturb the adjustment of the top slug.

7. Repeat the adjustment of T3 for the highest meter reading.

8. Turn the FUNCTION switch to OFF.

9. Turn the VFO dial fully counterclockwise until the plates of the VFO capacitor are fully closed.

10. Rotate the calibrated dial so that the end of the white stripe near the ~~3.8~~ 3.6 marking is aligned with the hairline and tighten the setscrew. Check to see that full rotation of the dial does not cause any drag or rubbing. If it does, move the dial or knob slightly on the shaft, then recalibrate and retighten the setscrew.

11. Bend the pilot lamp bracket and adjust the lamp positions for best illumination of the dial and meter.

VFO CALIBRATION

Disconnect the antenna from the Transceiver and plug the dummy load into the ANT socket.

Following are two ways in which to check the dial calibration with two different types of receivers. Use the method that applies to the type of receiver available.

CALIBRATION WITH A STANDARD AM BROADCAST RECEIVER

1. Connect one end of a short wire to the antenna terminal of the receiver. Place the other end of this wire near tube V14 in the Transceiver.

2. Set the receiver dial to ~~1495~~ 1295 kc and the VFO dial to ~~3.8~~ 3.6.

3. Set the FUNCTION switch to PTT and allow the Transceiver to warm up.

4. Adjust the slug of coil L5 until a whistle is heard in the speaker of the receiver. Coil L5 will normally have to be turned in a counterclockwise direction, viewed from the top of the chassis.

5. If this portion of the AM band has too much noise, set the receiver dial at ~~1695~~ 1495 kc and the Transceiver dial at ~~4.0~~ 3.8 MC. Then repeat the adjustment of L5. Trimmer C131B need not be adjusted at this time.

6. Turn the FUNCTION switch to OFF.

This alignment should provide fairly close calibration of the VFO. However, operation of the Transceiver near the ends of the VFO dial should be avoided until the VFO calibration is checked with a crystal calibrator or a very accurate amateur receiver.

CALIBRATION WITH AMATEUR BAND RECEIVER

1. Connect one end of a short wire to the antenna terminal of the receiver. Place the other end of this wire near tube V4 in the Transceiver.

2. Temporarily remove V5, the 12BY7 tube.

3. Turn the FUNCTION switch to TUNE and allow the Transceiver to warm up.

4. Set the dials of the receiver and Transceiver to ~~3.9~~ megacycles. The receiver should be operated in the CW mode.

5. Adjust coil L5 until the Transceiver signal is heard in the amateur receiver speaker. Check the VFO dial calibration by setting the dials of both the receiver and Transceiver first to ~~3.8~~ megacycles and then to ~~4.0~~ megacycles. The calibration should check near these points, and any dial variations should be corrected by adjusting coil L5 at ~~3.8~~ megacycles and C131B (the trimmer on the VFO variable capacitor) at ~~4.0~~ megacycles.

6. Turn the FUNCTION switch to OFF.

CRYSTAL CALIBRATOR CHECK OF VFO DIAL SETTINGS

The preceding adjustments of the VFO will only be as accurate as the receiver used. The calibration can be accurately checked by using the Heath Model HRA-10-1 Crystal Calibrator as an accessory with the Transceiver. The Crystal Calibrator accuracy should be checked against WWV by using a receiver other than the one in the Transceiver to set the calibrator at 5, 10, or 15 megacycles.

1. Plug the Crystal Calibrator into the calibrator socket of the Transceiver.

2. With the antenna plugged into the ANT socket, place the FUNCTION switch in the PTT position, and the Meter switch in the OPERATE TUNE position.

3. Turn on the Crystal Calibrator by pulling the AF GAIN control knob "out." Allow sufficient time for the Calibrator to warm up.

4. Check the calibration accuracy of the VFO at the ~~3.8~~, ~~3.9~~, and ~~4.0~~ megacycle settings of the VFO dial of the Transceiver. Any dial variations should be corrected by adjusting coil L5 at ~~3.8~~ megacycles and C131B (the trimmer on the VFO variable capacitor) at ~~4.0~~ megacycles. Repeat until the dial checks with the calibrator signals.

5. Turn the FUNCTION switch to OFF.

TRANSMITTER ALIGNMENT

BIAS SETTING

1. Connect the dummy load to the ANT socket.

2. Remove V5, the 12BY7 tube.

3. Set the FUNCTION switch to TUNE and the Meter switch to BIAS SET.

4. Then adjust the FINAL BIAS control for a reading of S3 on the meter. There is a small triangle above the "3" on the meter to indicate the proper bias setting.

5. Turn the FUNCTION switch OFF, and replace V5, the 12BY7 tube.

RF AMPLIFIER ADJUSTMENT

1. Connect a voltmeter across the dummy load, if your dummy load provides a DC voltmeter connection, or use a VTVM with an RF probe positioned near the dummy load. Do not connect the RF probe to the dummy load as there is sufficient voltage output to burn out the diodes of some RF probes.

2. With the VFO dial set to ~~3.8~~ 3.6, place the FUNCTION switch in the TUNE position and the Meter switch to TUNE-OPERATE. The voltmeter should indicate some output.

3. Adjust the FINAL TUNE control for maximum output, which should give a reading of over S3 on the Transceiver meter. If the meter goes above S9, adjust the CARRIER NULL control to drop the level to S9.

4. Adjust both slugs of transformer T2 for a maximum meter indication.

BALANCED MODULATOR ADJUSTMENT

With the voltmeter lead still connected to the dummy load or with the VTVM RF probe near the dummy load, place the FUNCTION switch in the PTT position. Allow the Transceiver to warm up for at least one-half hour before adjusting the balanced modulator.

1. Press the PTT switch, or ground lug #2 of the MIC socket with a short wire, and adjust the CARRIER NULL control for a minimum signal indication on the test meter.

2. Using the long end of the alignment tool, adjust the bottom slug of transformer T1 to the bottom of its travel (clockwise from the top of the chassis).

3. Adjust the top slug of T1 for a maximum signal indication. This should take only a very slight turn of the slug. If the slug is turned down too far, a larger, but false, peak will appear.

4. Again, adjust the CARRIER NULL control for a minimum signal indication.

NOTE: The signal level should now become quite low, and if a VTVM and RF probe are being used, the probe should be connected to the center pin (pin 2) of the ANT socket.

5. Now adjust the bottom slug of T1 back up into the transformer. As the slug is adjusted, there will be a dip to a minimum indication. Adjust the slug for the minimum (dip) indication.

6. Readjust the CARRIER NULL control and the bottom slug of transformer T1 for the lowest possible minimum signal indication. The adjustments are now quite critical; turn them slowly. Repeat this adjustment until the best null is obtained.

7. Disconnect the test meter from the Transceiver and if used, the wire connected between lug 2 of the MIC socket and the chassis.

8. Turn the FUNCTION switch to TUNE and the Meter switch to OPERATE TUNE.

9. Adjust the TUNE LEVEL control to increase the meter reading to an S3 to S6 indication.

DRIVER TUNING

The driver tuning coils are preset at the factory.

FINAL ASSEMBLY

FIXED STATION-MOBILE CONSIDERATIONS

Before installing the Transceiver in the cabinet, determine whether it will be used for fixed station or mobile operation, or both. For fixed station use only, perform the steps under Fixed Station Installation; for mobile use only, perform the steps under Mobile Installation. If you plan to use the Transceiver alternately in fixed station and mobile installations, perform the steps in both sections.

Refer to Pictorial 20 for the following steps.

NOTE: If a microphone clip is to be used (supplied with your microphone), it may be installed on either end of the cabinet, so the microphone can be lifted up and out, or so the microphone can be pulled toward the front and out. Use 6-32 x 1/4" screws, #6 lockwashers, and 6-32 nuts to mount the microphone clip.

FIXED STATION INSTALLATION

(✓) Install the medium rubber feet at the rear holes in the bottom of the cabinet, using 6-32 x 3/8" screws, #8 flat metal washers, #6 lockwashers, and 6-32 nuts.

(✓) Install large rubber feet at the front holes in the bottom of the cabinet, using 6-32 x 1" screws, #6 lockwashers, and 6-32 nuts.

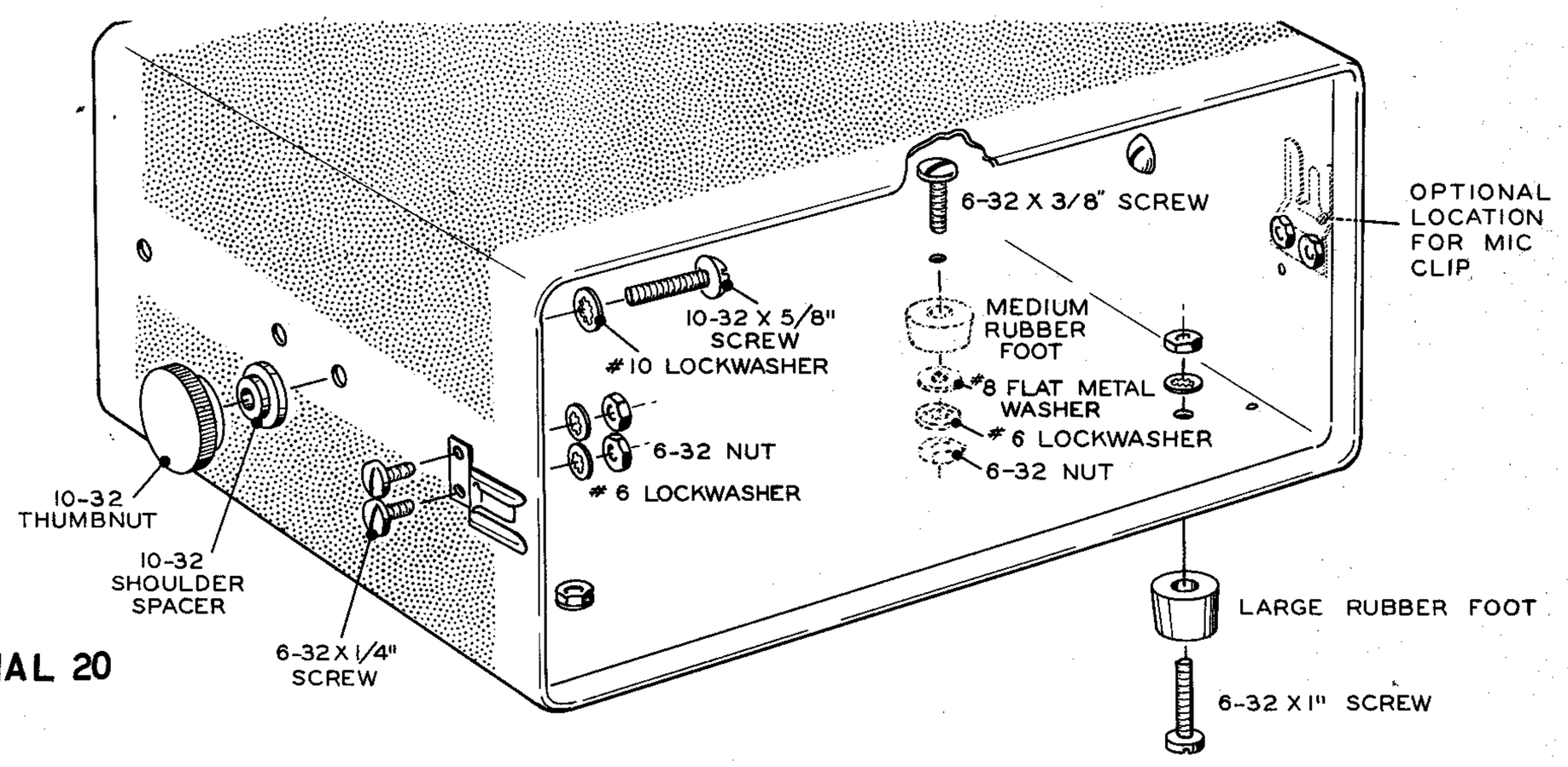

PICTORIAL 20

MOBILE INSTALLATION

Determine whether the Transceiver is to be mounted under the dash or on the floor of the automobile. See Figures 4A and 4B. If under-the-dash mounting is preferred, there are two holes near the center on each side of the cabinet which can be used for mounting. For floor mounting, the holes at the rear on each side of the cabinet can be used. Choose the holes that will provide best balance for your installation.

(✓) Mount the gimbal bracket hardware in the cabinet holes decided upon. Use 10-32 x 5/8" screws, #10 lockwashers, 10-32 shoulder spacers, and 10-32 thumbnuts. See Pictorial 20.

Figure 4A

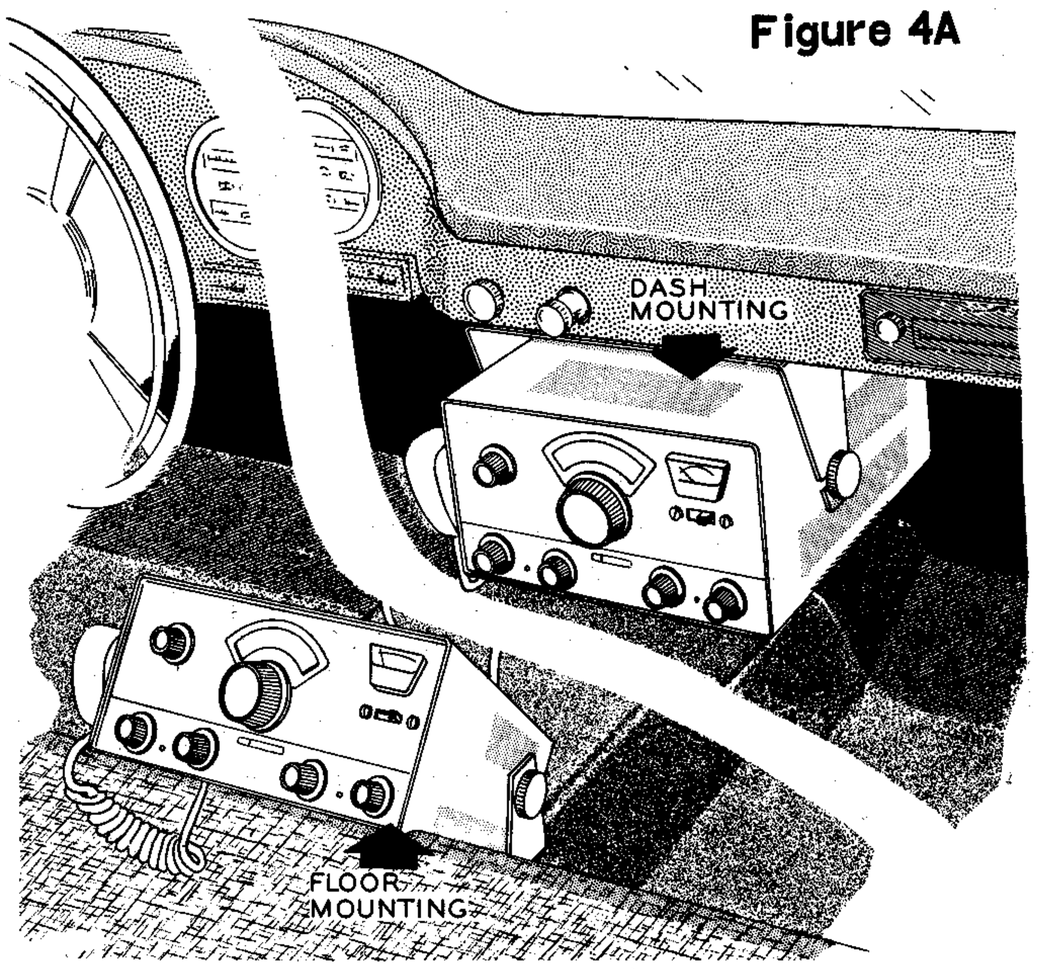

Figure 4B

( ) Referring to Detail 20A, install four small rubber feet into the gimbal bracket. This is easily done by looping a length of bare wire around the groove of the rubber foot and passing the wire through the hole in the gimbal bracket. Pull on the wire until the rubber foot is properly seated in the hole.

CRYSTAL CALIBRATOR MOUNTING

Refer to Pictorial 21 for the following steps.

If the Heath HRA-10-1 Crystal Calibrator is to be used with the Transceiver, perform the following steps before mounting the Transceiver in the cabinet.

( ) Referring to Detail 21A remove screws A and B from the Calibrator.

( ) Mount the angle brackets to the Calibrator at A and B, using #6 fiber flat washers, #6 fiber shoulder washers, #6 lockwashers, and 6-32 x 1/2" screws. Be sure the fiber shoulder washers are centered properly in the larger holes of the angle brackets.

( ) Plug the Calibrator into the Calibrator socket of the Transceiver.

CABINET MOUNTING

Refer to Pictorial 21 for the following steps.

( ) Slide the Transceiver chassis into the cabinet. If the crystal calibrator is used, be careful not to damage it when sliding the Transceiver into the cabinet.

( ) Secure the chassis in the cabinet, using six #6 x 1/4" sheet metal screws, four in the back and two in the bottom.

( ) If the Heath Crystal Calibrator is used, fasten it to the rear of the cabinet with two #6 x 1/4" sheet metal screws.

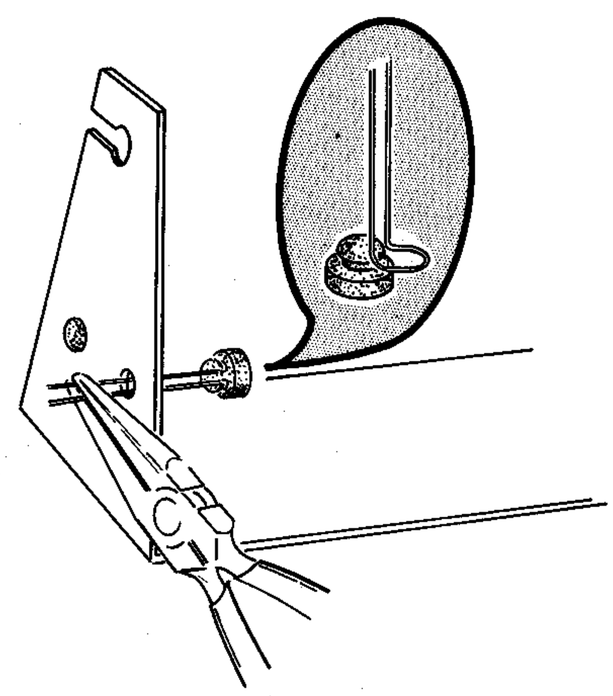

Detail 20A

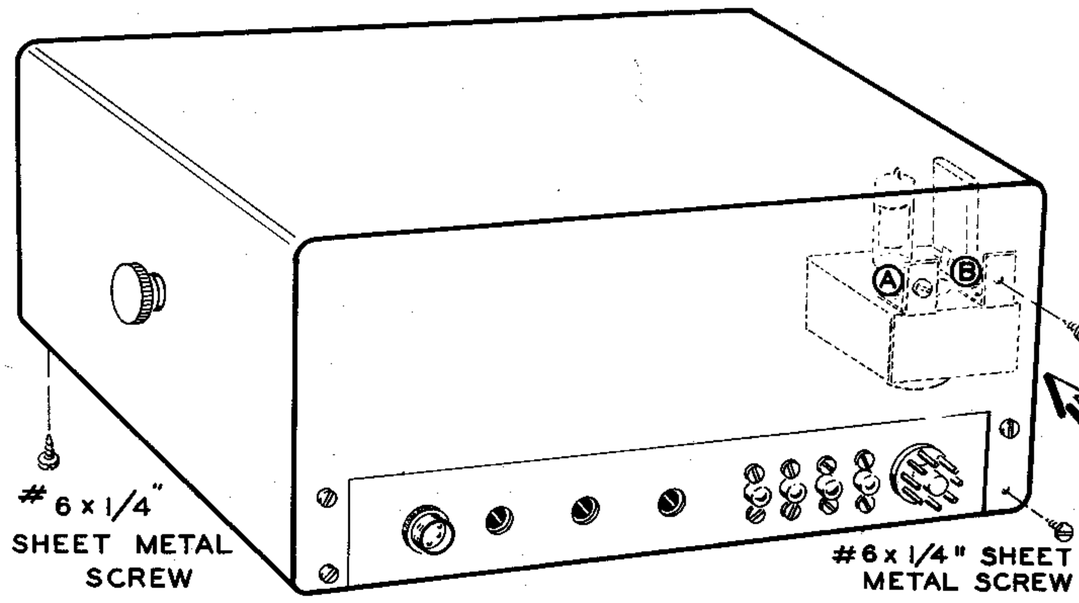

PICTORIAL 21

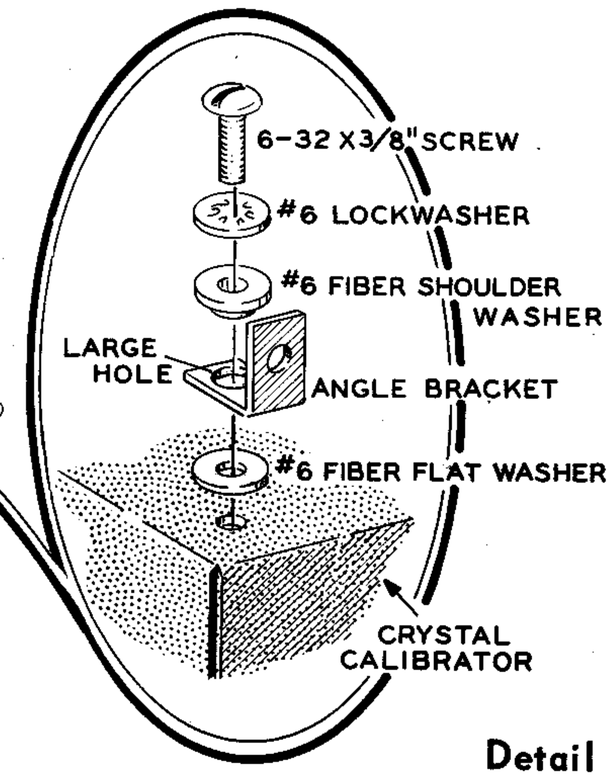

Detail 21A

MICROPHONE

Any high impedance crystal, dynamic, or ceramic microphone having a minimum output of 10 millivolts can be used with the Transceiver.

Pictorial 22 shows how most communication microphones can be wired for VOX, PTT, or both types of operation. The only difference in wiring to change the microphone from just PTT operation to both types of operation, is the addition of the jumper wire in the microphone. This additional wire keeps the audio lead from being opened when the microphone button is released, thus permitting VOX operation with the Transceiver. When wired in this manner the switch of the microphone will actuate the relay of the Transceiver for PTT operation.

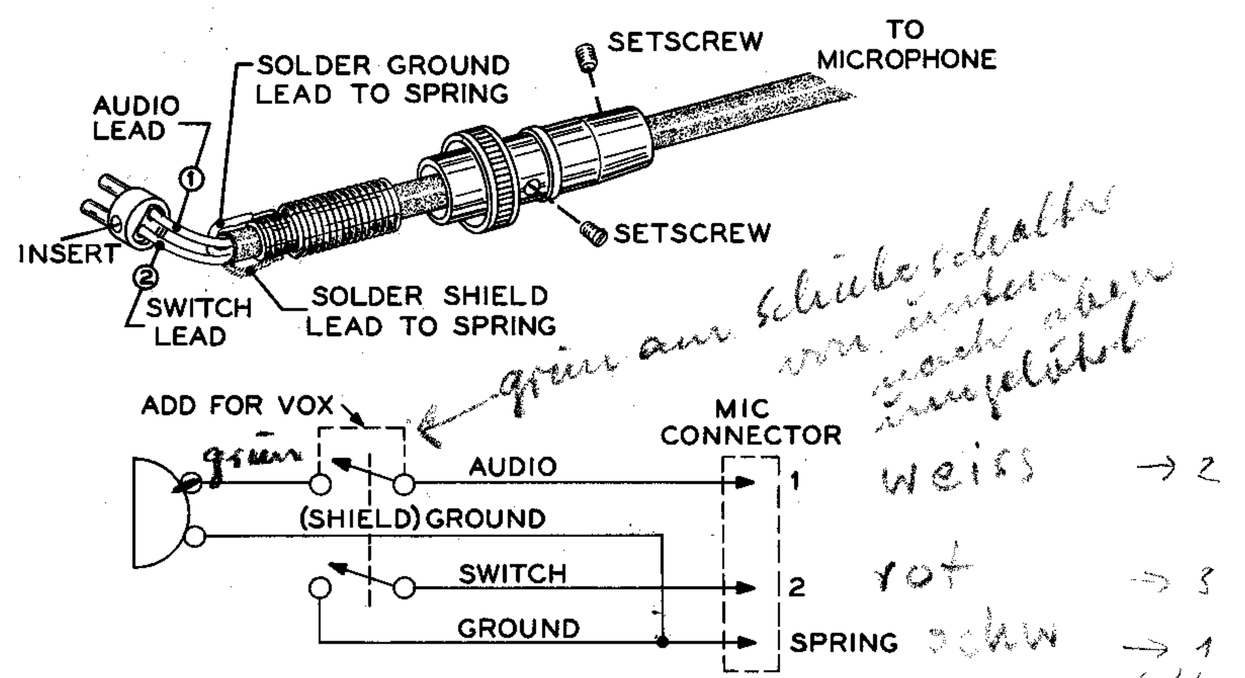

PICTORIAL 22

A microphone not having a switch will be satisfactory for VOX operation by installing the male microphone connector supplied. The audio lead should be connected to pin #1 and the shield should be connected to the spring of the connector.

INSTALLATION

FIXED STATION

The Transceiver must be placed in a location with adequate ventilation because of the amount of heat given off by the tubes. Inadequate ventilation could cause considerable damage to the circuit components.

The power supply can usually be located under a table or some other out-of-the-way place, since it is controlled by the FUNCTION switch of the Transceiver.

Because the Transceiver requires about 300 watts of power when transmitting, it should not be operated from an already heavily loaded AC outlet.

The Transceiver should be grounded to a ground rod or cold water pipe. Make the ground connection to the Transceiver at one of the cabinet mounting screws.

A doublet antenna fed by RG-58 or RG-59 cable, or an inverted "Vee" type antenna fed with coax cable will work very well with the Transceiver. Other types of antennas using high impedance end-feeding, off-center feeding, open wire lines, or 300 Ω twin lead, can be used if an antenna

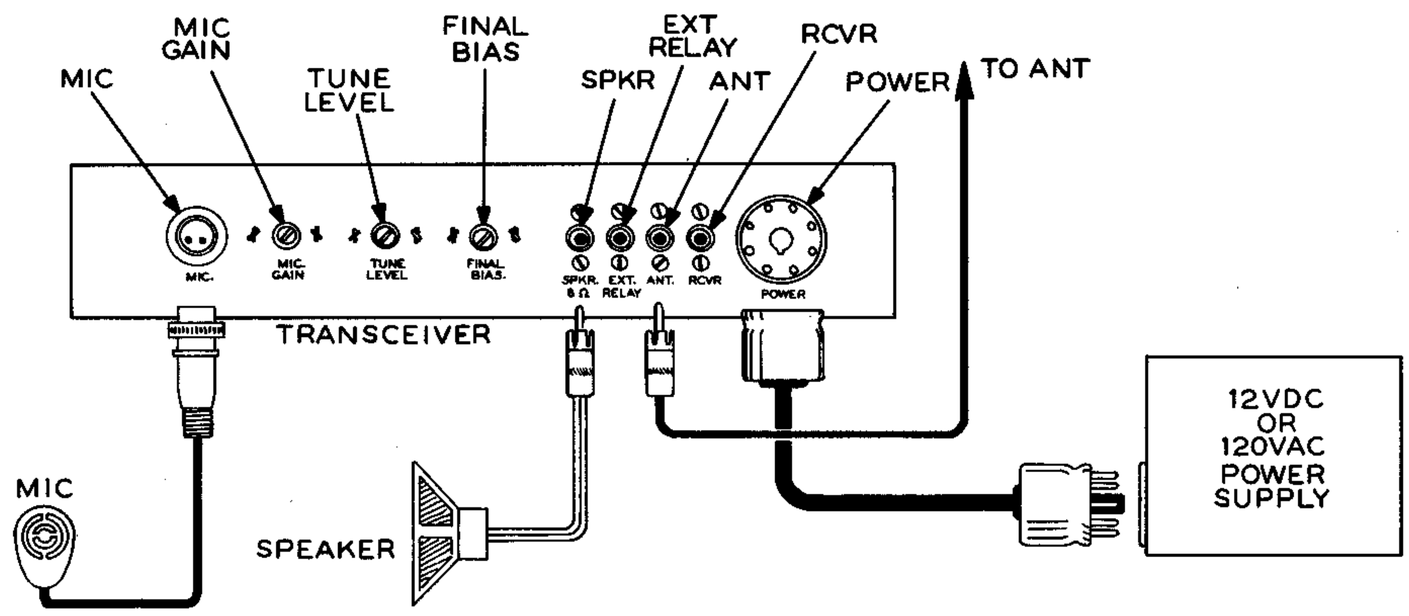

Figure 5

coupler is used between the antenna and Transceiver. The antenna used must provide a low SWR (standing wave ratio) to the Transceiver for successful operation. Lightning arrestors on the antenna are a must. The antenna must be grounded, and the Transceiver should be taken off the air when a lightning storm is near.

The FINAL TUNE knob should peak near the center third of rotation with a properly matched antenna. Do not use an antenna that wil not tune through a "peak" in TUNE. Connect a SWR bridge to the antenna and make sure the SWR is below 1.5 to 1. Power for operating the bridge may be obtained by carrier output in the TUNE position of the FUNCTION switch.

Use an 8Ω speaker capable of handling one watt of audio power.

Three typical installations are shown in Figures 5, 6, and 7. Figure 5 shows a basic hookup suitable for either fixed station or mobile operation. Figure 6 shows a fixed station installation using a linear amplifier with a built-in antenna relay switched by the Transceiver.

CAUTION: Remember that one side of the EXT RELAY socket in the Transceiver is connected to the chassis. Therefore, it should not be connected to 120 volt AC lines for relay switching. The AC voltage could cause the Transceiver chassis to be "hot," creating a shock hazard. The switching circuit of an AC external relay must be isolated from the Transceiver by using an isolation transformer.

If low voltage DC is used on the relay switching line, be very careful to get the polarity of the voltage connected properly. The grounded DC lead must be connected to the outside (chassis) of the plug.

Figure 7 shows a setup incorporating a linear amplifier which does not have a built-in relay. When using a separate antenna relay in this manner, a suitable isolation transformer must be used to operate the relay and isolate the AC line from the Transceiver chassis.

MOBILE

The preferred location for mobile operation is under the dash, although you may desire to

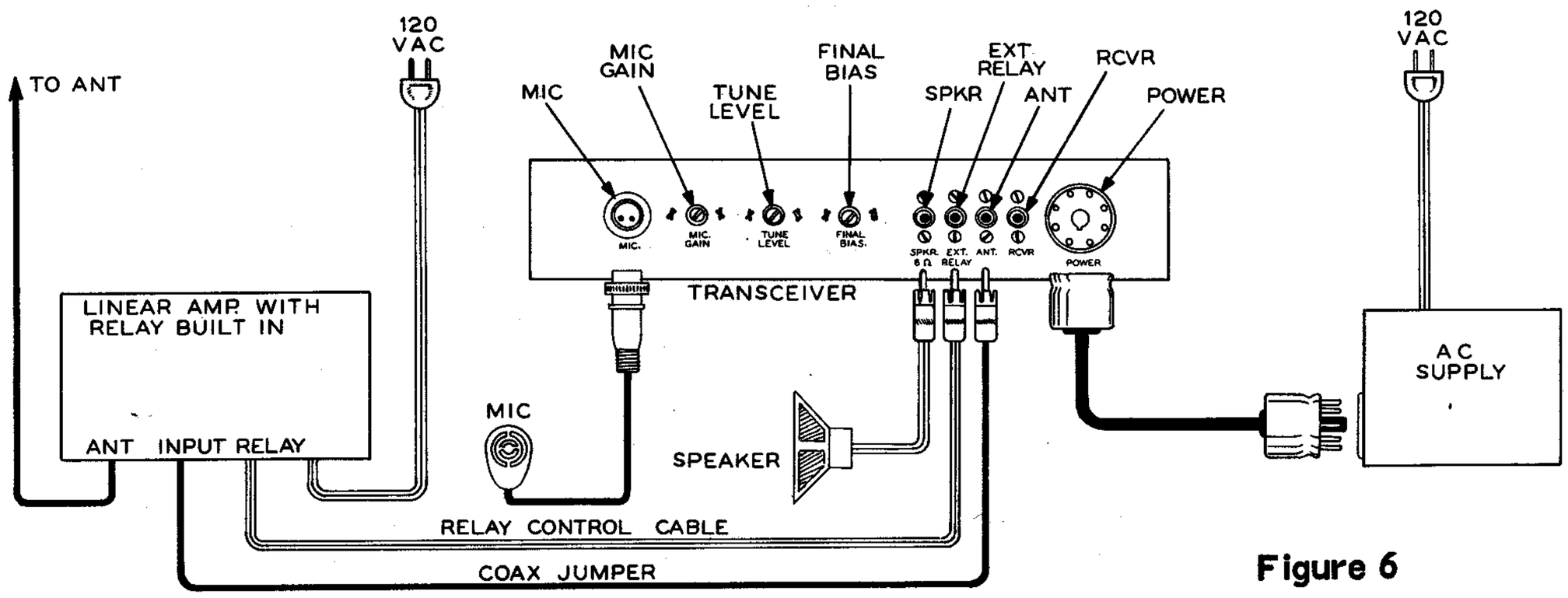

Figure 6

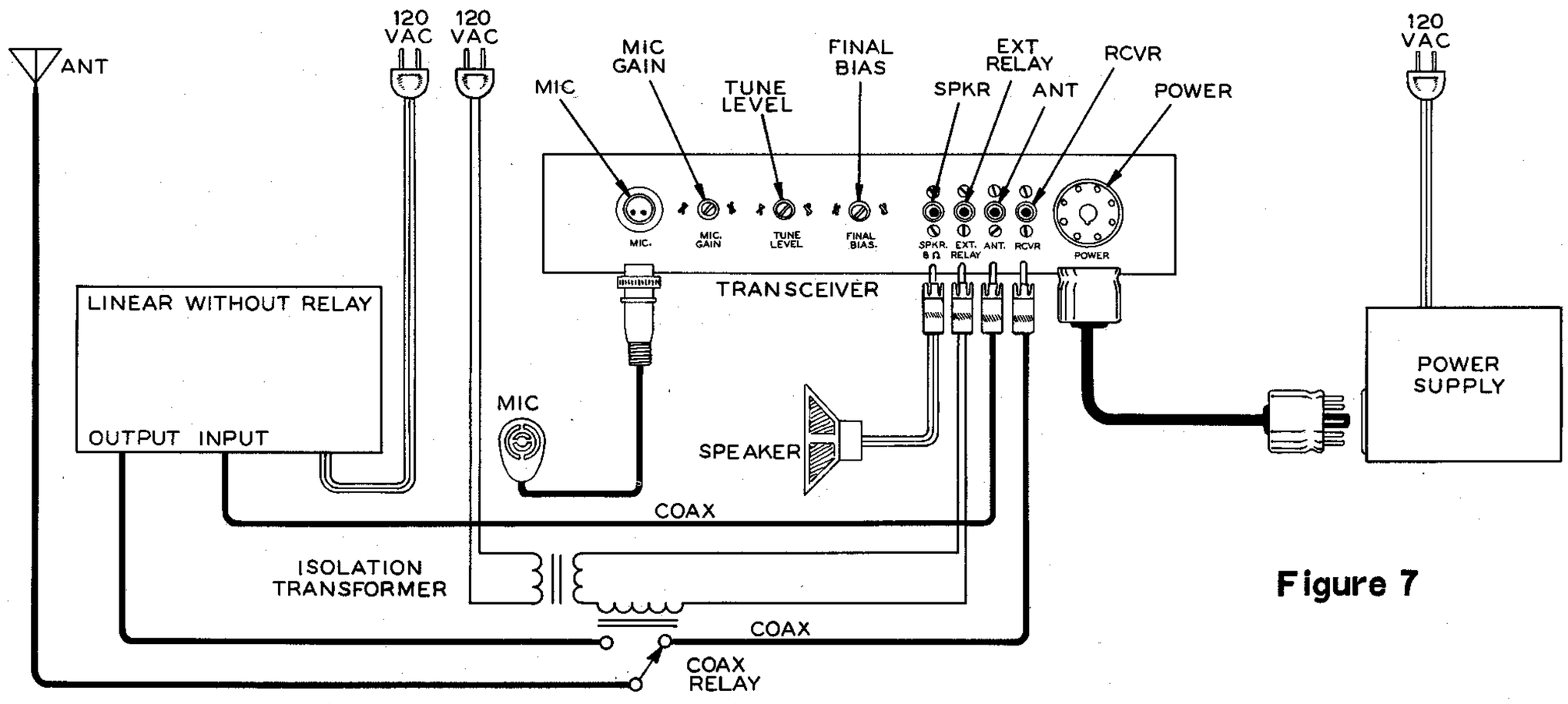

Figure 7

mount the unit on the floor. See Figures 4A and 4B. The gimbal bracket should be mounted in the desired location in the automobile, using the #10 sheet metal screws. The starting holes for these screws should be made with a 9/64" drill, being careful not to drill into existing wiring or instruments. Keep all Transceiver cables clear of the automobile pedals and control cables.

Any cables that have to go through the fire wall will usually fit through existing grommets. If it is necessary to make holes through a sheet metal partition, a long tapered punch usually works better than a drill. A drilled hole leaves sharp edges which can cut the wires. When a punch is driven through the metal, the sharp edge is rolled back and a smooth hole will result.

Be sure to leave enough extra cable so the Transceiver can be removed from the gimbal bracket and operated, to permit adjusting the rear apron controls.

Mount the antenna according to the manufacturer's instructions. Be sure to make a good ground connection between the shield of the coax cable and the car body at the antenna base. Low frequency antennas with loading coils must be carefully tuned, as a small change in antenna length changes the SWR considerably. The frequency range of whip antennas on 75 meters is usually only about 25 kc; beyond this range loading becomes difficult or impossible without readjusting the antenna.

IMPORTANT NOTE: To make a loaded whip antenna present a 50 Ω load to match the coax cable on 75 meters, a 1000 μμf mica capacitor must be connected between the base of the antenna and ground. This can be done inside the automobile body as shown in Figure 8A, or between the antenna and one of the mounting screws, using two control solder lugs as shown in Figure 8B. The necessary parts are supplied with this kit. Connect a SWR bridge to the antenna and make sure the SWR is below 1.5 to 1. Power for operating the bridge may be obtained by carrier output in the TUNE position of the FUNCTION switch.

The FINAL TUNE knob will peak in the center third of rotation with a properly matched antenna. Do not use an antenna that will not tune through a "peak" in TUNE.

The Heath Mobile Speaker can be used for installation in an automobile, or a car radio speaker (3.2 to 16 Ω) may be used.

Connect the cables and mount the Transceiver in the gimbal bracket. Position as desired and tighten the thumbnuts.

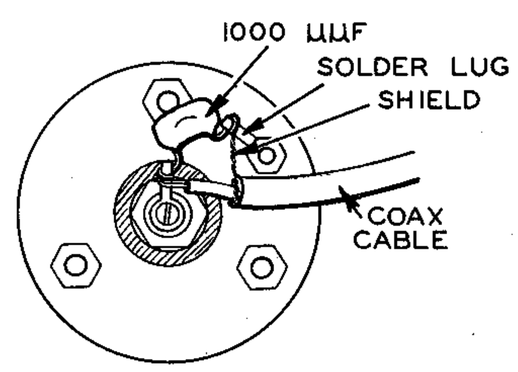

Figure 8A

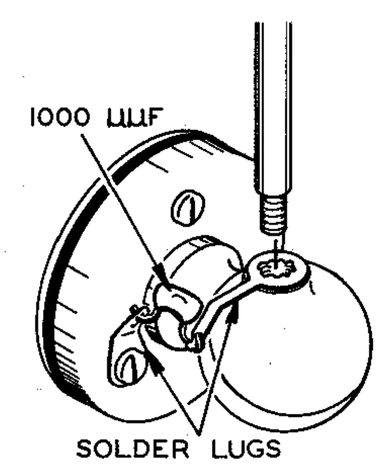

Figure 8B

In some mobile installations you may find that ignition or generator noise is too high for satisfactory operation. Figure 9 shows a number of ways in which this type of noise can be suppressed. Use as many of these suggestions as necessary to obtain the desired results.

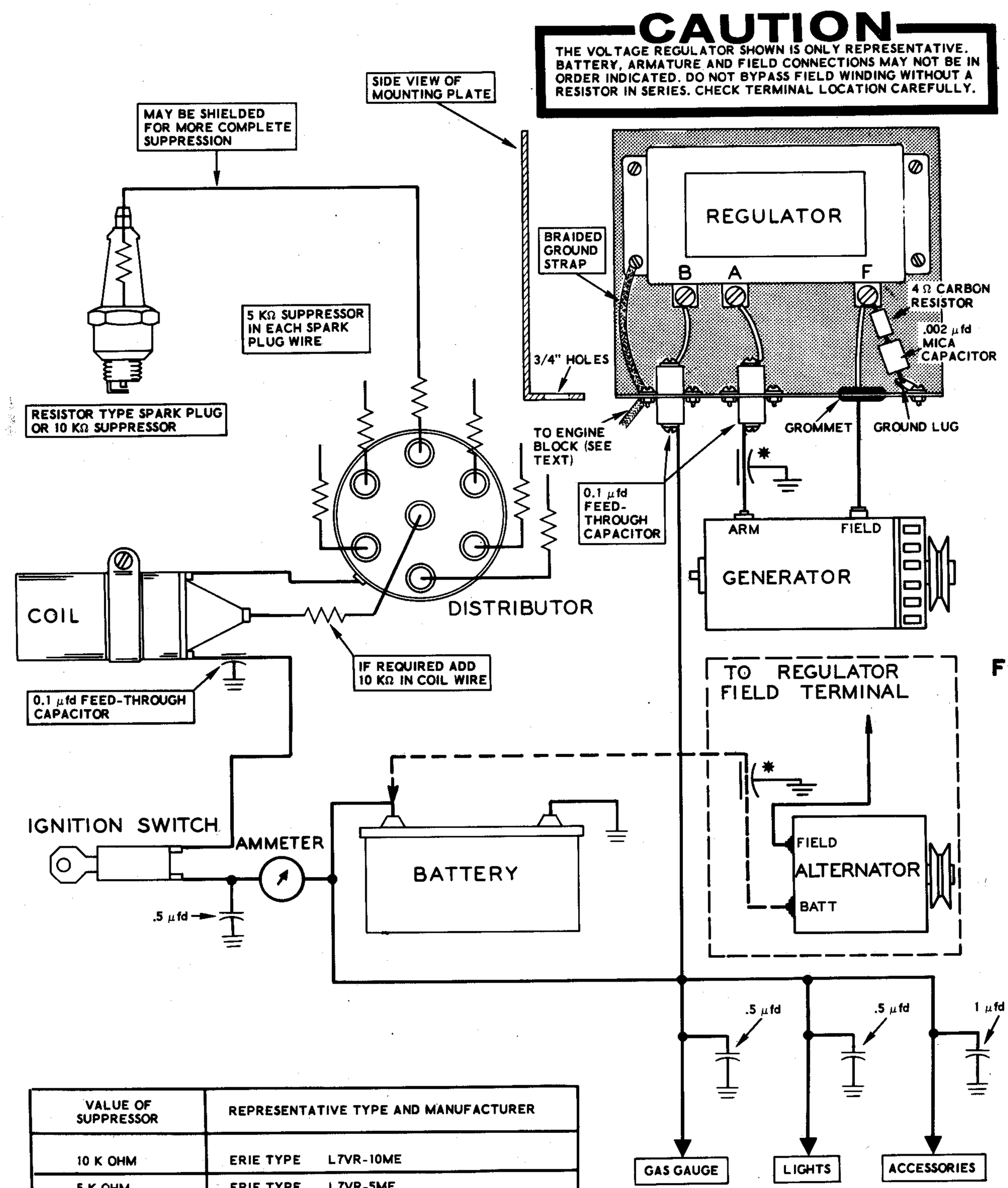

Figure 9

VALUE OF SUPPRESSOR	REPRESENTATIVE TYPE AND MANUFACTURER	
10 K OHM	ERIE TYPE	L7VR-10ME
5 K OHM	ERIE TYPE	L7VR-5ME
0.5 MFD FEED-THROUGH	SPRAGUE	48P18 (40 AMP)
0.1 MFD FEED-THROUGH	SPRAGUE	80P3
.5 MFD	MALLORY	AG-451
1 MFD	MALLORY	AG-452

OPERATION

NOTE: IT SHOULD BE NOTED THAT AN AMATEUR RADIO OPERATOR AND STATION LICENSE (GENERAL CLASS PRIVILEGES) IS REQUIRED TO PLACE THIS TRANSCEIVER ON THE AIR. Information regarding licensing and amateur frequency allocations may be obtained from publications of the Federal Communications Commission or the American Radio Relay League.

FUNCTION OF OPERATING CONTROLS

Figure 10 contains a brief description of the function of each control. Read the control descriptions carefully, then proceed with the following information.

VFO

Since the transmitter and receiver are locked together in frequency, it is not necessary to "zero" the receiver frequency with the transmitter. Therefore, care must be taken that the VFO dial is not disturbed during a contact because your transmitted signal frequency will change.

RECEIVING

Operation of the Transceiver is quite simple, since there is little tuning to do once the alignment has been completed. Turn the Transceiver on by placing the FUNCTION switch in the PTT position. After a short warmup period, stations should be heard by tuning the VFO dial. The volume is adjusted by the RF and AF GAIN controls. With the meter switch in the OPERATE TUNE position the meter will indicate received signal strength in "S" units, and db over S9. Normally the RF GAIN control is operated at its maximum clockwise position, where the meter indicates the strength of received signals in S units. If signals are extremely strong, the RF GAIN control can be reduced to give the desired level. The S METER reading is affected by the setting of the RF GAIN control.

TRANSMITTING

After an operating frequency has been selected by tuning the VFO dial, place the FUNCTION switch in the TUNE position, turning on the transmitter. With the Meter switch in the OPERATE TUNE position, adjust the FINAL TUNE control for a maximum indication on the meter, indicating proper tuning for maximum output power. Transmitting with the FUNCTION switch in the PTT or VOX position gives a meter indication of the ALC voltage. As the operator talks, the meter should deflect a couple of S units, indicating maximum output peaks. (The Heath Monitorscope can be used with the Transceiver in fixed-station operation to provide a visual display of transmitter output.) The meter may read below the zero mark while transmitting, without harm.

The meter switch may be placed in the BIAS SET position while transmitting to observe plate current variations of the final RF amplifiers. Normal talking should produce peaks at about S6 on the meter, with loud steady tones resulting in full-scale peaks. If the peaks of average talking levels are above S6, the MIC GAIN is set too high, and should be reduced to provide the S6 level.

To keep the Transmitter in peak operating condition, it should be adjusted periodically as directed in the Alignment section of the manual. The BIAS control should be adjusted as directed in the Alignment instructions. The BIAS control setting should be checked and adjusted as necessary whenever power supplies are changed.

After alignment has been completed and the carrier properly nulled, the bias level can be checked and adjusted anytime by observing the meter in the BIAS SET position when the PTT button is pressed, with no modulation.

VOX

To use the voice controlled relay, place the FUNCTION switch in the VOX position. Adjust the VOX control for the microphone sensitivity desired to turn on the transmitter. The VOX DELAY control should be adjusted for the hold-in time desired after the operator stops talking. Maximum counterclockwise setting of the control will keep the transmitter ON all the time.

ANTENNA

The antenna must have a low SWR, since the output of the Transceiver has fixed loading and a limited tuning range. The antenna tuning should be checked with a reflected power meter or SWR

bridge to make sure it has an SWR of 1-1/2 to 1, or less. Operation with a high SWR will result in overloading the output tubes. When using a SWR bridge, carrier may be obtained for tuning the antenna by switching the FUNCTION switch to the TUNE position. Care must be taken that the SWR bridge is not overloaded when transmitting SSB, since the peak output power is much higher than the output in TUNE. The antenna must be matched to, and fed with, 50 Ω coax cable for best results; the transmitter is not designed to load into random lengths of wire or open-wire transmission lines.

Special care must be taken with mobile installations, since short loaded and center loaded antennas are very critical to tune. An operating frequency change of 10 or 20 kc will often change the antenna tuning considerably. Better antennas with loading coils have higher "Q" and sharper tuning. Follow the antenna manufacturer's instructions carefully to obtain proper adjustment.

CRYSTAL CALIBRATION

Convenient, accurate signals at 100 kc intervals for receiver dial checking can be obtained by using the Heath Crystal Calibrator. The Crystal Calibrator can be plugged into the calibrator socket of the Transceiver. It is turned on by pulling out the AF GAIN control knob.

IN CASE OF DIFFICULTY

1. Recheck the wiring. Trace each lead in colored pencil on the Pictorial as it is checked. It is frequently helpful to have a friend check your work. Someone who is not familiar with the unit may notice something consistently overlooked by the constructor.

2. It is interesting to note that about 90% of the kits that are returned for repair, do not function properly due to poor connections and soldering. Therefore, many troubles can be eliminated by reheating all connections to make sure that they are soldered as described in the Proper Soldering Techniques section of this manual.

3. Check to be sure that all tubes and cable connections are in their proper locations. Make sure that all tubes light up properly.

4. Check the tubes with a tube tester or by substitution of tubes of the same types and known to be good.

5. Check the values of the parts. Be sure that the proper part has been wired into the circuit, as shown in the pictorial diagrams and as called out in the wiring instructions.

6. Check for bits of solder, wire ends or other foreign matter which may be lodged in the wiring.

7. If, after careful checks, the trouble is still not located and a voltmeter is available, check voltage readings against those shown in Figures 11 and 12. NOTE: All voltage readings were taken with an 11 megohm input vacuum tube voltmeter. Voltages may vary as much as 10%.

8. A review of the Circuit Descriptions will prove helpful in indicating where to look for trouble.

9. Check the power supply and antenna.

NOTE: To aid in servicing or troubleshooting the Transceiver, refer to the Resistance and Voltage readings on Figures 11 through 13 and the Circuit Board X-Ray Views shown in Figures 14 and 15 on Pages 54 and 55.

Breaks in the foil of the circuit board can easily be detected by placing a bright light under the foil side of the board and looking through the board from the lettered side. A break will appear as a hair-line crack in the foil.

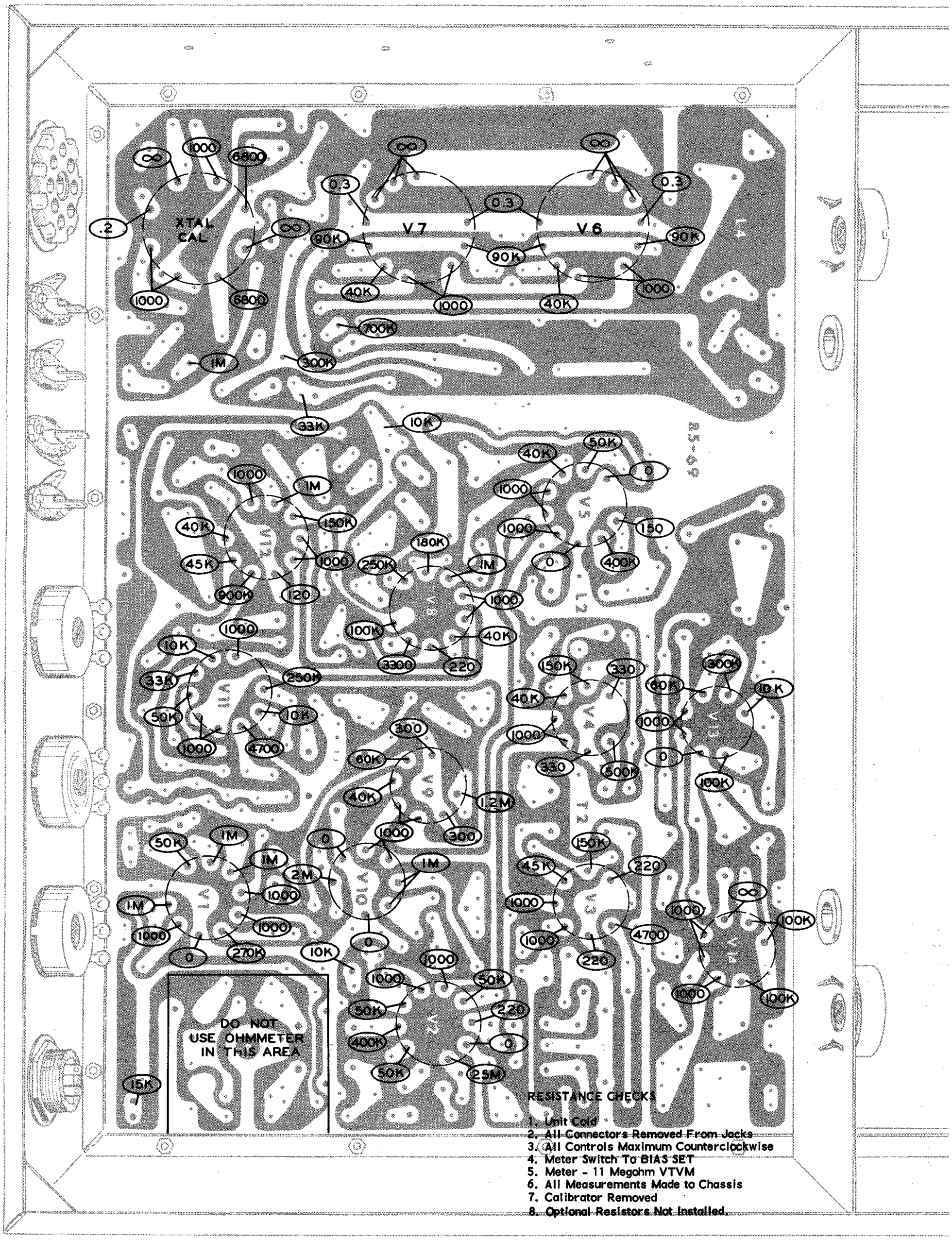
XTAL CAL
V7
V6
V5
V4
V3
V2
V1
V8
V9
V10
V11
V12
V13
V14
DO NOT USE OHMMETER IN THIS AREA
RESISTANCE CHECKS
1. Unit Cold
2. All Connectors Removed From Jacks
3. All Controls Maximum Counterclockwise
4. Meter Switch To BIAS SET
5. Meter - 11 Megohm VTVM
6. All Measurements Made to Chassis
7. Calibrator Removed
8. Optional Resistors Not Installed.

Figure 11

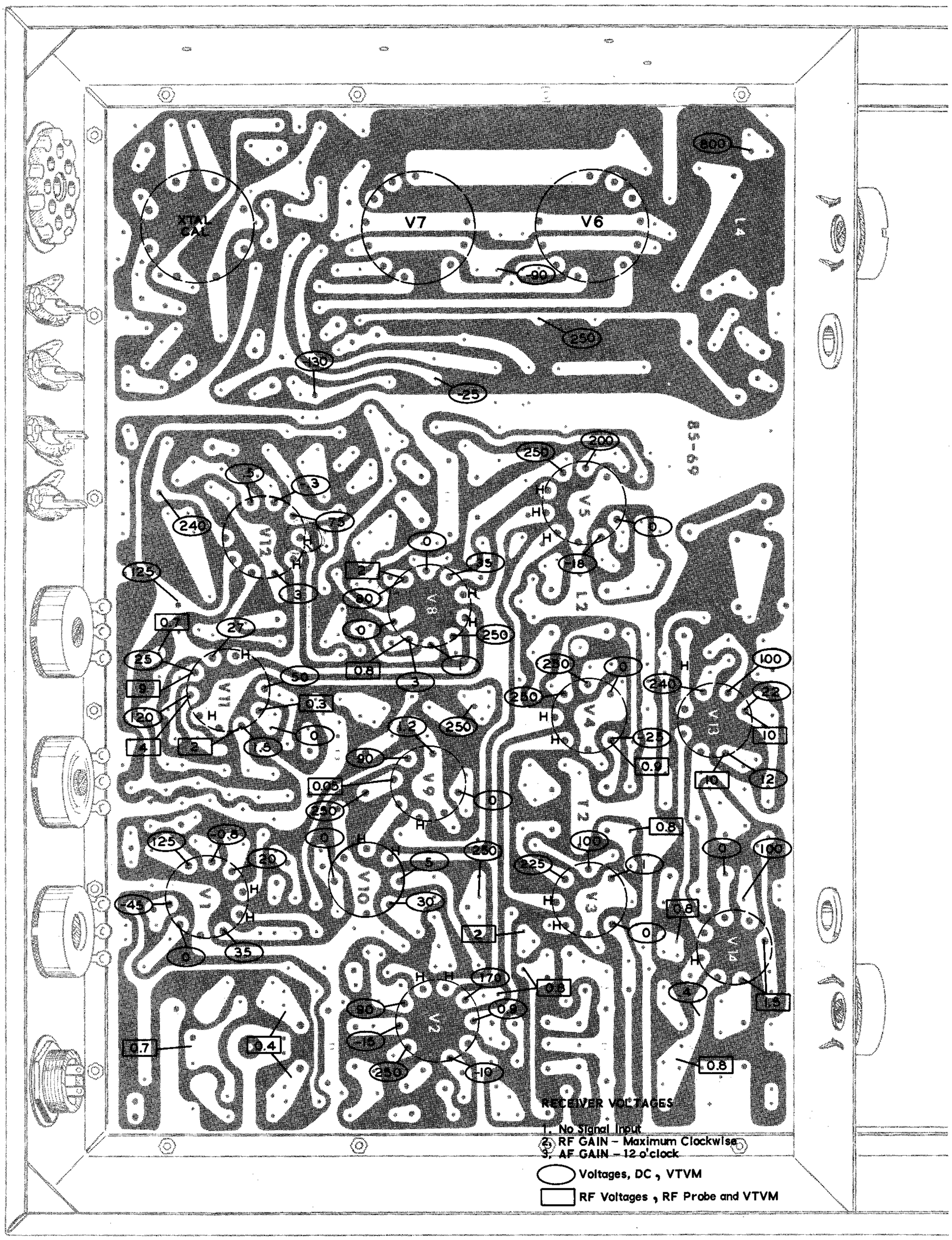
XTAL CAL
V7
V6
V5
V4
V3
V2
V1
V8
V9
V10
V11
V12
V13
V14
RECEIVER VOLTAGES
1. No Signal Input
2. RF GAIN – Maximum Clockwise
3. AF GAIN – 12 o'clock
Voltages, DC, VTVM
RF Voltages, RF Probe and VTVM

Figure 12

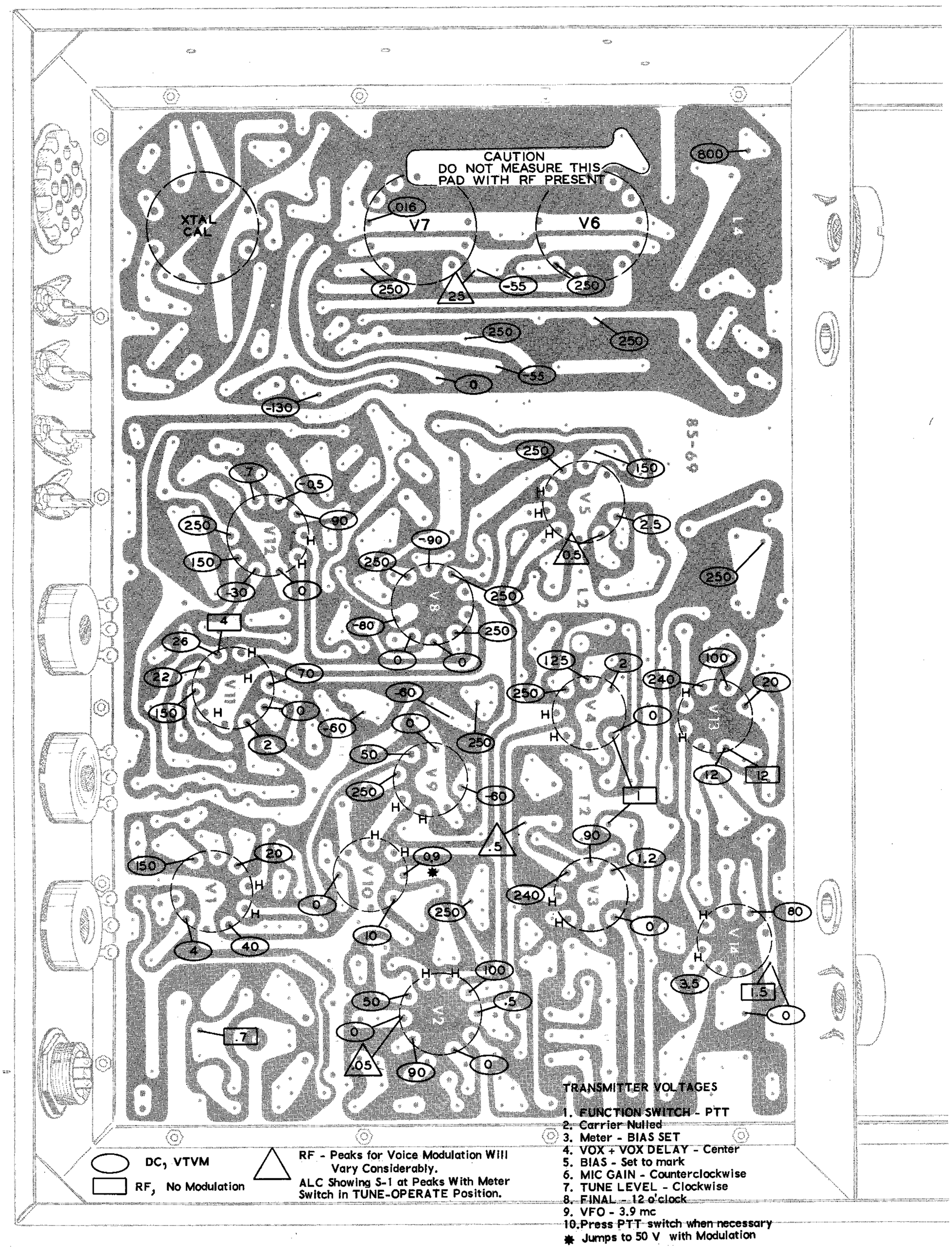
CAUTION
DO NOT MEASURE THIS
PAD WITH RF PRESENT
XTAL CAL
V7
V6
V5
V4
V3
V2
V1
V8
V9
V10
V11
V12
V13
V14
V15
V16
V17
V18
V19
V20
V21
V22
V23
V24
V25
V26
V27
V28
V29
V30
V31
V32
V33
V34
V35
V36
V37
V38
V39
V40
V41
V42
V43
V44
V45
V46
V47
V48
V49
V50
V51
V52
V53
V54
V55
V56
V57
V58
V59
V60
V61
V62
V63
V64
V65
V66
V67
V68
V69
V70
V71
V72
V73
V74
V75
V76
V77
V78
V79
V80
V81
V82
V83
V84
V85
V86
V87
V88
V89
V90
V91
V92
V93
V94
V95
V96
V97
V98
V99
V100
V101
V102
V103
V104
V105
V106
V107
V108
V109
V110
V111
V112
V113
V114
V115
V116
V117
V118
V119
V120
V121
V122
V123
V124
V125
V126
V127
V128
V129
V130
V131
V132
V133
V134
V135
V136
V137
V138
V139
V140
V141
V142
V143
V144
V145
V146
V147
V148
V149
V150
V151
V152
V153
V154
V155
V156
V157
V158
V159
V160
V161
V162
V163
V164
V165
V166
V167
V168
V169
V170
V171
V172
V173
V174
V175
V176
V177
V178
V179
V180
V181
V182
V183
V184
V185
V186
V187
V188
V189
V190
V191
V192
V193
V194
V195
V196
V197
V198
V199
V200
V201
V202
V203
V204
V205
V206
V207
V208
V209
V210
V211
V212
V213
V214
V215
V216
V217
V218
V219
V220
V221
V222
V223
V224
V225
V226
V227
V228
V229
V230
V231
V232
V233
V234
V235
V236
V237
V238
V239
V240
V241
V242
V243
V244
V245
V246
V247
V248
V249
V250
V251
V252
V253
V254
V255
V256
V257
V258
V259
V260
V261
V262
V263
V264
V265
V266
V267
V268
V269
V270
V271
V272
V273
V274
V275
V276
V277
V278
V279
V280
V281
V282
V283
V284
V285
V286
V287
V288
V289
V290
V291
V292
V293
V294
V295
V296
V297
V298
V299
V300
V301
V302
V303
V304
V305
V306
V307
V308
V309
V310
V311
V312
V313
V314
V315
V316
V317
V318
V319
V320
V321
V322
V323
V324
V325
V326
V327
V328
V329
V330
V331
V332
V333
V334
V335
V336
V337
V338
V339
V340
V341
V342
V343
V344
V345
V346
V347
V348
V349
V350
V351
V352
V353
V354
V355
V356
V357
V358
V359
V360
V361
V362
V363
V364
V365
V366
V367
V368
V369
V370
V371
V372
V373
V374
V375
V376
V377
V378
V379
V380
V381
V382
V383
V384
V385
V386
V387
V388
V389
V390
V391
V392
V393
V394
V395
V396
V397
V398
V399
V400
V401
V402
V403
V404
V405
V406
V407
V408
V409
V410
V411
V412
V413
V414
V415
V416
V417
V418
V419
V420
V421
V422
V423
V424
V425
V426
V427
V428
V429
V430
V431
V432
V433
V434
V435
V436
V437
V438
V439
V440
V441
V442
V443
V444
V445
V446
V447
V448
V449
V450
V451
V452
V453
V454
V455
V456
V457
V458
V459
V460
V461
V462
V463
V464
V465
V466
V467
V468
V469
V470
V471
V472
V473
V474
V475
V476
V477
V478
V479
V480
V481
V482
V483
V484
V485
V486
V487
V488
V489
V490
V491
V492
V493
V494
V495
V496
V497
V498
V499
V500
V501
V502
V503
V504
V505
V506
V507
V508
V509
V510
V511
V512
V513
V514
V515
V516
V517
V518
V519
V520
V521
V522
V523
V524
V525
V526
V527
V528
V529
V530
V531
V532
V533
V534
V535
V536
V537
V538
V539
V540
V541
V542
V543
V544
V545
V546
V547
V548
V549
V550
V551
V552
V553
V554
V555
V556
V557
V558
V559
V560
V561
V562
V563
V564
V565
V566
V567
V568
V569
V570
V571
V572
V573
V574
V575
V576
V577
V578
V579
V580
V581
V582
V583
V584
V585
V586
V587
V588
V589
V590
V591
V592
V593
V594
V595
V596
V597
V598
V599
V600
V601
V602
V603
V604
V605
V606
V607
V608
V609
V610
V611
V612
V613
V614
V615
V616
V617
V618
V619
V620
V621
V622
V623
V624
V625
V626
V627
V628
V629
V630
V631
V632
V633
V634
V635
V636
V637
V638
V639
V640
V641
V642
V643
V644
V645
V646
V647
V648
V649
V650
V651
V652
V653
V654
V655
V656
V657
V658
V659
V660
V661
V662
V663
V664
V665
V666
V667
V668
V669
V670
V671
V672
V673
V674
V675
V676
V677
V678
V679
V680
V681
V682
V683
V684
V685
V686
V687
V688
V689
V690
V691
V692
V693
V694
V695
V696
V697
V698
V699
V700
V701
V702
V703
V704
V705
V706
V707
V708
V709
V710
V711
V712
V713
V714
V715
V716
V717
V718
V719
V720
V721
V722
V723
V724
V725
V726
V727
V728
V729
V730
V731
V732
V733
V734
V735
V736
V737
V738
V739
V740
V741
V742
V743
V744
V745
V746
V747
V748
V749
V750
V751
V752
V753
V754
V755
V756
V757
V758
V759
V760
V761
V762
V763
V764
V765
V766
V767
V768
V769
V770
V771
V772
V773
V774
V775
V776
V777
V778
V779
V780
V781
V782
V783
V784
V785
V786
V787
V788
V789
V790
V791
V792
V793
V794
V795
V796
V797
V798
V799
V800
V801
V802
V803
V804
V805
V806
V807
V808
V809
V810
V811
V812
V813
V814
V815
V816
V817
V818
V819
V820
V821
V822
V823
V824
V825
V826
V827
V828
V829
V830
V831
V832
V833
V834
V835
V836
V837
V838
V839
V840
V841
V842
V843
V844
V845
V846
V847
V848
V849
V850
V851
V852
V853
V854
V855
V856
V857
V858
V859
V860
V861
V862
V863
V864
V865
V866
V867
V868
V869
V870
V871
V872
V873
V874
V875
V876
V877
V878
V879
V880
V881
V882
V883
V884
V885
V886
V887
V888
V889
V890
V891
V892
V893
V894
V895
V896
V897
V898
V899
V900
V901
V902
V903
V904
V905
V906
V907
V908
V909
V910
V911
V912
V913
V914
V915
V916
V917
V918
V919
V920
V921
V922
V923
V924
V925
V926
V927
V928
V929
V930
V931
V932
V933
V934
V935
V936
V937
V938
V939
V940
V941
V942
V943
V944
V945
V946
V947
V948
V949
V950
V951
V952
V953
V954
V955
V956
V957
V958
V959
V960
V961
V962
V963
V964
V965
V966
V967
V968
V969
V970
V971
V972
V973
V974
V975
V976
V977
V978
V979
V980
V981
V982
V983
V984
V985
V986
V987
V988
V989
V990
V991
V992
V993
V994
V995
V996
V997
V998
V999
V1000
DC, VTVM
RF, No Modulation
RF - Peaks for Voice Modulation Will Vary Considerably.
ALC Showing S-1 at Peaks With Meter Switch in TUNE-OPERATE Position.
TRANSMITTER VOLTAGES
1. FUNCTION SWITCH - PTT
2. Carrier Nulled
3. Meter - BIAS SET
4. VOX + VOX DELAY - Center
5. BIAS - Set to mark
6. MIC GAIN - Counterclockwise
7. TUNE LEVEL - Clockwise
8. FINAL - 12 o'clock
9. VFO - 3.9 mc
10. Press PTT switch when necessary
* Jumps to 50 V with Modulation

Figure 13

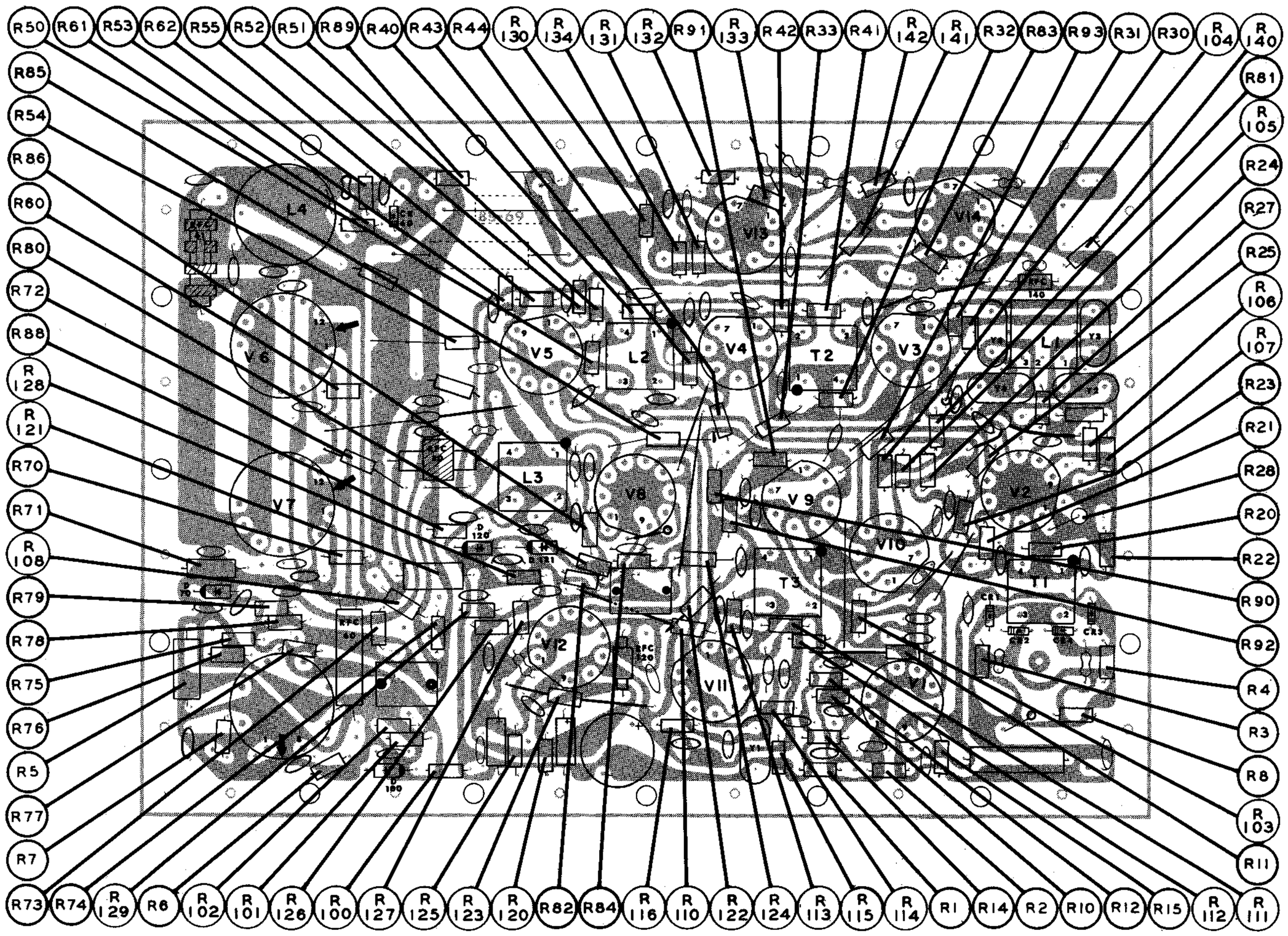

X-RAY VIEW RESISTORS
(VIEWED FROM FOIL SIDE)

Figure 14

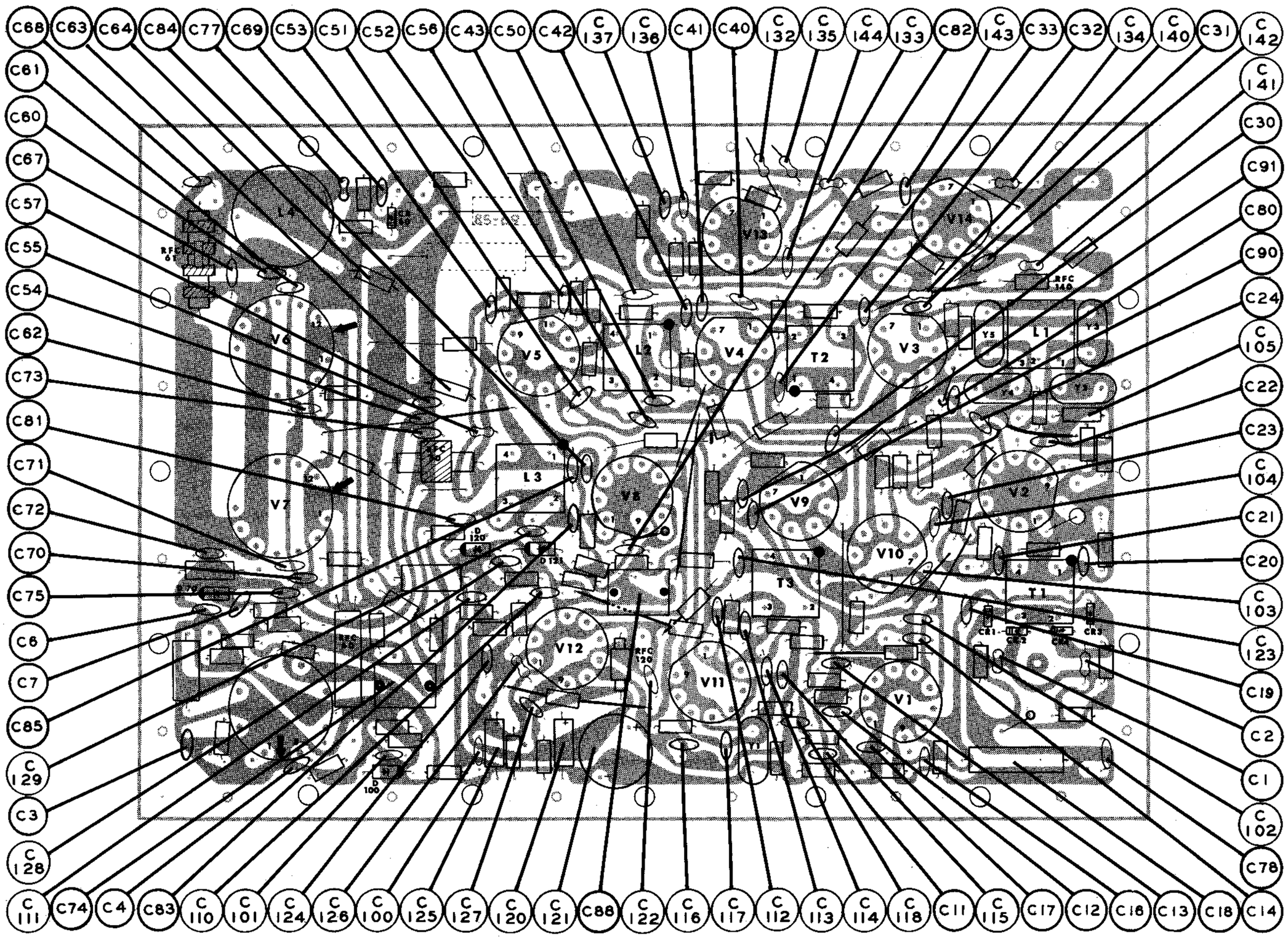

X-RAY VIEW CAPACITORS
(VIEWED FROM FOIL SIDE)

Figure 15

TROUBLESHOOTING CHART

TRANSMITTER DIFFICULTIES	POSSIBLE CAUSE
CARRIER NULL control changes carrier level, but not to a low enough level.	1. FUNCTION switch in TUNE position, inserting carrier. 2. Crystal diodes CR1 through CR4 installed backwards or are faulty. 3. Transformer T1 incorrectly aligned.
No relative power indication.	1. Resistor R61 burned out, due to transmitting without antenna. 2. Antenna shorted. 3. TUNE LEVEL set too low.
Chopped or broken modulation, especially on peaks.	1. MIC GAIN control set too high. 2. Faulty microphone cable or connections. 3. Receiver cutoff bias line partially shorted. Check voltages and resistances.
Radical change in BIAS SET reading.	1. Changed power supplies without rechecking transmitter adjustment.
Transceiver locked in transmit mode.	1. VOX DELAY control set too high. 2. Push-to-talk button stuck in depressed position. 3. Tube V10 faulty.
Plates of RF final amplifier tubes get red hot.	1. No bias on tubes. Check voltage and resistances.
Very low input to grids of RF final amplifier tubes from driver V5.	1. Coils L2 and L3 improperly installed. Check color dot markings. 2. T2 not aligned properly.

RECEIVER DIFFICULTIES	POSSIBLE CAUSE
Receiver squeals and oscillates with no antenna connected.	1. Transmitter cutoff bias line partially shorted, turning on portions of the transmitter. Check voltages and resistances.
Received signals cannot be tuned in properly.	1. Other station operating on other sideband. Try other portions of the dial.
No sound from speaker.	1. Speaker unplugged or faulty. 2. Unit is transmitting.

GENERAL DIFFICULTIES	POSSIBLE CAUSE
Receive RF burns when removing antenna connector.	1. Transmitter tripped on by noise when in VOX operation.
Transceiver chassis "hot" causing electrical shock with linear amplifier connected.	1. Ungrounded high voltage connected to EXT RELAY socket. See Installation section of manual.
Filaments stay lit when Transceiver is turned OFF.	1. Improper power supply connections. 2. Power Supply (HP-20) still turned on. 3. HP-10 Power Supply not modified.
Meter reads backwards.	1. Meter improperly wired. 2. Meter switch improperly wired. 3. S METER ADJ control not set properly.
No output from VFO, V14.	1. Wrong or faulty tube in socket V13 or V14.

CIRCUIT DESCRIPTION

This Circuit Description is a detailed explanation of the Transceiver circuits that were covered only briefly in the General Circuit Description on Page 5. All circuit references in this description concern the Schematic Diagram.

SCHEMATIC DIAGRAM

The circled letter-number designations on the Schematic Diagram are used to identify resistors, capacitors, chokes, etc. Each of these designations is related to the tube stage in which it is used, by the first number; For instance, the resistors in tube stage V1 are designated R10, R11, etc. In tube stage V12 they are marked R120, R121, etc. This system of circuit component designation is used throughout the Schematic.

Numbers in diamonds on the Schematic refer to the color coding of the cable assembly wires. Numbers 1 through 9 indicate solid colors; numbers 10 through 18 refer to wires with a white background and a single color stripe; and numbers 20 through 28 refer to wires with a white background and two identical color stripes. The numbers can be related to wire colors by using the same color code as used for resistors: brown = 1, red = 2, orange = 3, etc.

TRANSMITTER SECTION

MICROPHONE AMPLIFIER V1A

Voice signals from the microphone are coupled through capacitor C12 to the grid of microphone amplifier tube V1A. The amplified signal at the plate of V1A is coupled through C14 to the Mic Gain control, and through capacitor C102 to the VOX (voice operated transmitter) circuit. The setting of the Mic Gain control determines the amount of modulation. Since V1A supplies signals for modulation and for VOX, it operates during both receiving and transmitting. Capacitor C10 bypasses to ground any RF signal picked up by the microphone push-to-talk switch lead.

AUDIO FREQUENCY CATHODE FOLLOWER

The audio signal from the Mic Gain control is applied to AF (audio frequency) cathode follower stage V1B. This stage matches the tube impedance to that of the balanced modulator. Bypass capacitor C19 keeps the modulator RF voltages from reaching V1B. During receiving, the relay cuts off V1B and a number of other transmitter stages.

BALANCED MODULATOR

When the audio signal from V1B and the RF signal from carrier oscillator V11B is applied to the 4-diode balanced modulator, two different frequencies are produced. This ring-type balanced modulator uses diodes CR1 through CR4.

One of the two signals produced by the balanced modulator is the sum of the audio and carrier frequencies; the other signal is the difference between the audio and carrier frequencies. These signals are the upper and lower sidebands.

The carrier signal is applied across the modulator diode ring in a balanced circuit, consisting of one winding of transformer T1, capacitors C1 and C2, resistors R3 and R4, and the Carrier Null control. The Carrier Null control is used to balance out the carrier signal in the modulator, leaving only the upper and lower sideband signals at the modulator output.

The output from the balanced modulator is the result of combining the audio and carrier signals. Neither the audio or carrier signals appear in the output, but the effect of the audio signals unbalancing the nulled circuit at an audio rate produces the sum-and-difference frequencies called sidebands. With no audio, there is no output from the balanced modulator.

With the Function switch in the Tune position, a DC voltage is applied to the balanced modulator through resistors R1 and R2. This voltage can be adjusted with the Tune Level control. This DC voltage is used to unbalance the modulator to provide a steady output signal for transmitter tuning purposes.

TRANSMITTER IF AMPLIFIER

The sideband signals from the balanced modulator are coupled through transformer T1 and then are amplified by transmitter IF (intermediate frequency) amplifier V2A. These signals are then applied to the crystal filter, consisting of crystals Y2 through Y5, and coil L1. The crystal filter eliminates the upper sideband, and permits the lower sideband to pass through to common IF amplifier V3 for additional amplification.

Stage V2 is turned off while receiving by applying additional negative DC voltage to its grid through the secondary of transformer T1. This control voltage is impressed on the ALC (automatic level control) line, which is also used to control the gain in a number of other transmitter stages to prevent overloading. Overloading can be detected by observing the action of the meter. Normally the meter rests at or slightly below zero; however, if the operator talks too loud or if the Mic Gain control is set too high, the transmitter section would overload. This causes a change in ALC voltage which increases the bias, reducing transmitter gain and causing meter deflection to indicate ALC action.

COMMON IF AMPLIFIER V3

When transmitting, V3 amplifies the lower sideband signal from the crystal filter and then applies this signal to IF transformer T2. When receiving, the receiver IF signal is amplified by V3 and is then applied to receiver IF amplifier V9.

TRANSMITTER MIXER V4

Transmitter mixer V4 receives two signals simultaneously; one is the SSB signal from T2, and the other is the VFO (variable frequency oscillator) signal from V13 and V14, through the secondary of transformer T2. Tube V4 produces the frequency sum of these signals, which is at the proper operating frequency. This signal is applied to the primary of coil L2. (Tube V4 is cut off by bias voltage from the ALC line when receiving.) Coil L2, which has two windings, is broad-tuned to cover the 80 meter band. This coil is also used when receiving, and is then connected to receiver RF amplifier V8A and receiver mixer V8B.

DRIVER V5

Driver V5 receives the signal voltage from coil L2 through parasitic suppressor resistor R50. The ALC line is also connected to V5 to control transmitter gain, and to cut off the driver when receiving. Single-tuned coil L3 and the double-tuned coil L2 form a bandpass device that covers the frequencies of the 80 meter band without the necessity of tuning the driver stage. Voltage for bridge neutralization of final amplifier tubes V6 and V7 is fed through capacitors C63 and C64 to the bottom of coil L3, and across C55. The small winding of coil L3 is used for the input signal from the antenna when receiving.

RF FINAL AMPLIFIERS

RF final amplifiers V6 and V7 are connected in parallel. High voltage plate connections are under the chassis. The grids are connected by a long foil strip on the circuit board. This strip is bypassed at its ends by capacitor C61 and C71 to suppress VHF oscillations. Cathode resistor R71 is a meter shunt for measuring cathode current when the meter switch is in the BIAS SET position.

Tubes V6 and V7 are operated as linear amplifiers, with high power sensitivity. Grid load resistor R72 is connected to the Final Bias control through R73, to allow adjustment of the grid voltage for proper operation. The Final Bias control is grounded through resistor R75 when transmitting. When receiving, this control is grounded through resistors R76 and R77 to increase the grid bias to cut off the final tubes.

AUTOMATIC LEVEL CONTROL

No grid current is drawn by tubes V6 and V7 in normal linear operation; however, when higher than normal grid drive is applied, grid current will flow and change the bias voltage. This higher-than-normal grid drive, caused by too much audio signal, makes the bias voltage change at an audio rate. This varying bias voltage is coupled through capacitor C75 to diode D70, which rectifies the signal to develop the DC negative ALC voltage, which is applied to V2A, V4, and V5. Resistors R78 and R79, along with capacitor C74, filter this voltage and provide the proper time delay for ALC action. The entire ALC circuit is biased above ground by resistors R76 and R77 to cut off the transmitter section when receiving.

TRANSMITTER OUTPUT CIRCUIT

The plates of the RF amplifier tubes are connected to the supply voltage by choke RFC61. Their signal is coupled to the pi-section output circuit through capacitor C67. Output coil L4 is tuned by Final Tune capacitor C65. Antenna loading is fixed by capacitor C77. With the Function switch in the Tune position, a sampling of the output voltage from resistors R61 and R62, and diode CR60, gives a meter indication to indicate proper adjustment of the Final Tune capacitor.

RELAY TRANSMIT-RECEIVE SWITCHING

Switching between transmitting and receiving is done by the relay. Section A of the relay switches the antenna, and section C switches the bias voltages.

Section B of the relay is connected to the Ext Relay socket on the rear of the Transceiver, and can be used to control external equipment, such as a linear amplifier or antenna relay. Because one side of the Ext Relay socket is grounded to the Transceiver chassis, the socket must not be used to switch any voltage in a circuit that operates above ground, as the chassis would become "hot," causing a possible shock hazard.

VOX AMPLIFIER V10 AND RELAY AMPLIFIER V2B

The Transceiver can be switched from receive to transmit by either the push-to-talk or the VOX method. VOX Amplifier V10 is normally operated in a saturated condition, that is, with very low plate voltage and maximum plate current. Positive half cycles of the voice signals from V1A have no effect on V10, however, the negative half cycles cause the plate current to drop, thus increasing plate voltage. This increased plate voltage fires neon lamp NE2, providing a positive switching action. The voltage from the neon lamp is then amplified by relay amplifier V2B, which operates the relay. Capacitor C105 and resistor R107 form a delay network that establishes the time the relay stays closed after being tripped. The length of time is determined by the setting of the VOX Delay control.

ANTI-TRIP CIRCUIT

Because the VOX stages operate on both transmit and receive, the speaker signals during receive must be kept from tripping the relay when receiving. This is done by taking a portion of the audio signal from AF output stage V12A, rectifying it with diode D100 to produce a positive voltage, and feeding this voltage to the grid of V10 from the VOX control. This voltage tends to <u>increase</u> the plate current of V10; signals from the microphone (picked up from the speaker) tend to <u>decrease</u> the plate current. Therefore

with both signals present at the grid of V10, the signals cancel each other, preventing the speaker from tripping the VOX circuit. Speaking into the microphone produces signals not present in the speaker circuit, permitting the VOX circuit to function normally. The VOX control not only adjusts for proper anti-trip voltage, but also determines the sensitivity of the VOX circuit.

PUSH-TO-TALK CIRCUIT

With the Function switch in the PTT (push-to-talk) position, V10 is disabled by grounding its grid, V2B is made to operate and close the relay by grounding its grid (shorting the bias) with the push-to-talk switch in the microphone. The Function switch in the PTT position also makes the VOX delay circuit inoperative by removing C105 from ground. Push-to-talk operation with the Function switch in the VOX position uses the VOX delay circuit, causing the receiver to "delay" before coming on after the microphone button is released. The Function switch in the Tune position turns the transmitter on by grounding the grid of V2B.

RECEIVER SECTION

RADIO FREQUENCY AMPLIFIER V8A AND RECEIVER MIXER V8B

The incoming signal is connected to RF amplifier V8A through coil L3. The amplified signal from V8A is then coupled through coil L2 to receiver mixer V8B. During receiving, cutoff bias is removed in the receiver section to permit tubes V8A, V8B, V9, and V12A to operate. V8A is controlled by bias from the AVC (automatic volume control) circuit. AVC in the receiver is similar to ALC in the transmitter, in that it maintains a constant receiver output (gain) even though the incoming signal level may vary considerably. The cutoff voltage on the bias line is controlled by section C of the relay.

CRYSTAL FILTER

The signal is coupled from mixer V8B to the crystal filter through C80, which is small in value to avoid upsetting the input impedance of the filter. The crystal filter exhibits the same characteristics in receiving as in transmitting; it shapes the IF passband to have steep sides, a flat top, and a narrow bandwidth. This permits good selectivity for SSB reception in crowded amateur bands.

COMMON IF AMPLIFIER V3 AND RECEIVER IF AMPLIFIER V9

Signals from the crystal filter are amplified by common IF amplifier V3 and then fed to receiver IF amplifier V9. The cathode and screen of tube V9 are connected directly to those of tube V2A. The meter, which is connected in this circuit, indicates received signal strength in S units, as the AVC voltage changes the current in V9. The meter functions as an ALC indicator when transmitting without any switching. The gain of V9 is controlled by the AVC voltage applied through resistors R91 and R92.

PRODUCT DETECTOR V11A AND AUDIO FREQUENCY AMPLIFIER V12B.

The amplified signal from V9 is coupled through IF transformer T3 to the grid of product detector V11A. Also, a signal from carrier oscillator V11B is fed to the cathode of V11A. A heterodyne mixing action takes place in V11A, resulting in an output signal which is the difference frequency of these two signals: an audio signal. Capacitors C111 and C112 bypass any RF signal coming from V11A, but permit the audio signal to pass through to AF amplifier V12B. The output from V12B is fed to the AF output amplifier V12A through the AF Gain control, and to the AVC circuit.

AUTOMATIC VOLUME CONTROL

Audio voltage is coupled to diodes D120 and D121 through resistor R128 and capacitor C128. The diodes and capacitor C129 form a voltage doubler, producing a negative DC voltage proportional to the signal strength. Full AVC voltage is applied to the grid of receiver RF amplifier V8A to prevent overloading by strong received signals.

Capacitor C129 in the AVC circuit charges quickly to furnish a fast AVC response time,

while the charging of larger capacitor C88 gives a slow AVC release time. Resistors R80, R122, R123, and R124, with capacitor C123, divide the AVC voltage applied to V9 and V12A and provide decoupling. To provide delayed AVC, resistor R123 is returned to the cathode of V12B rather than to ground. This balances the AVC voltage (caused by noise when no signal is being received) with a small positive voltage to improve receiver sensitivity at low signal levels.

AUDIO FREQUENCY OUTPUT AMPLIFIER V12A

Amplified audio signals from V12A are fed to the speaker socket through output transformer T4. To provide maximum intelligibility, the frequency response of the output stage is limited to the voice frequency range by a sharp-cutoff, high frequency, degenerative feedback loop. High frequencies across RFC120 causes its impedance to rise. The high frequencies are thus returned out-of-phase to the grid of V12B. This signal cancels out the incoming high frequency audio and noise signals at the grid of V12B. Capacitor C120 is a low frequency bypass to ground, and capacitor C127 serves as a parasitic oscillation suppressor.

CARRIER OSCILLATOR

Carrier oscillator V11B supplies an RF signal to the balanced modulator, and a heterodyning signal to product detector V11A. Tube V11B is a Colpitts type oscillator. Crystal Y1 determines the operating frequency to accurately maintain the proper frequency relationship with the crystal filter bandpass frequencies. Capacitors C117 and C118 provide feedback to maintain oscillation. The output is taken from the junction of capacitors C115 and C116.

VFO

Variable frequency oscillator V13 is also a Colpitts type oscillator, which operates at low frequencies for maximum stability. Coil L5 provides the necessary inductance, while capacitors C132, C133, and C134 form a divider for oscillator feedback and output connections. C130 is a negative temperature coefficient capacitor for temperature correction. The oscillator output is taken from the junction of capacitors C133 and C134, and is applied to cathode follower V14. The harmonics are suppressed by capacitor C134. The signal output from V14 is connected to receiver mixer V8B through capacitor C142, and to transmitter mixer V4 through a filter circuit comprised of choke RFC140, and capacitors C140 and C141. The filter circuit separates the VFO frequencies from the IF and RF signals also present at this point, thus stopping signal leakthrough which would cause spurious oscillation in the IF stages.

ACCESSORY CRYSTAL CALIBRATOR

The accessory plug-in crystal calibrator is turned on by pulling out the knob of the AF Gain control. The calibrator filament circuit is grounded internally to the calibrator chassis. For this reason, the calibrator chassis must not be grounded to the transceiver chassis. Resistor R6 is the calibrator plate current return; resistor R5 drops the calibrator filament voltage to 6 volts.

FILAMENTS

The filament wiring of the Transceiver is a series-parallel arrangement that balances the filament voltage without wasting power in dropping resistors. This filament arrangement allows the use of both 6 volt and 12 volt filament tubes in the Transceiver design. The filaments of RF power amplifiers V6 and V7 are isolated by choke RFC60 to prevent RF energy from getting to the other tube filaments.

POWER SUPPLY

Operating voltages for the Transceiver are provided by an external power supply. The power supply is turned on or off by a switch on the rear of the Transceiver Function switch. This off-on switch is wired through the Transceiver power plug to the external power supply.

SERVICE INFORMATION

SERVICE

If, after applying the information in this manual and your best efforts, you are still unable to obtain proper performance, it is suggested that you take advantage of the technical facilities which the Heath Company makes available to its customers.

The Technical Consultation Department is maintained for your benefit. This service is available to you at no charge. Its primary purpose is to provide assistance for those who encounter difficulty in the construction, operation or maintenance of HEATHKIT equipment. It is not intended, and is not equipped to function as a general source of technical information involving kit modifications nor anything other than the normal and specified performance of HEATHKIT equipment.

Although the Technical Consultants are familiar with all details of this kit, the effectiveness of their advice will depend entirely upon the amount and the accuracy of the information furnished by you. In a sense, YOU MUST QUALIFY for GOOD technical advice by helping the consultants to help you. Please use this outline:

1. Before writing, fully investigate each of the hints and suggestions listed in this manual under In Case Of Difficulty. Possibly it will not be necessary to write.

2. When writing, clearly describe the nature of the trouble and mention all associated equipment. Specifically report operating procedures, switch positions, connections to other units, and anything else that might help to isolate the cause of trouble.

3. Report fully on the results obtained when testing the unit initially and when following the suggestions under In Case Of Difficulty. Be as specific as possible and include voltage readings if test equipment is available.

4. Identify the kit model number and date of purchase, if available. Also mention the date of the kit assembly manual. (Date at bottom of Page 1.)

5. Print or type your name and address, preferably in two places on the letter.

With the preceding information, the consultant will know exactly what kit you have, what you would like it to do for you and the difficulty you wish to correct. The date of purchase tells him whether or not engineering changes have been made since it was shipped to you. He will know what you have done in an effort to locate the cause of trouble and, thereby, avoid repetitious suggestions. In short, he will devote full time to the problem at hand, and through his familiarity with the kit, plus your accurate report, he will be able to give you a complete and helpful answer. If replacement parts are required, they will be shipped to you, subject to the terms of the Warranty.

The Factory Service facilities are also available to you, in case you are not familiar enough with electronics to provide our consultants with sufficient information on which to base a diagnosis of your difficulty, or in the event that you prefer to have the difficulty corrected in this manner. You may return the completed equipment to the Heath Company for inspection and necessary repairs and adjustments. You will be charged a minimal service fee, plus the price of any additional parts or material required. However, if the completed kit is returned within the Warranty period, parts charges will be governed by the terms of the Warranty. State the date of purchase, if possible.

Local Service by Authorized HEATHKIT Service Centers is also available in some areas and often will be your fastest, most efficient method of obtaining service for your HEATHKIT equipment. Although charges for local service are generally somewhat higher than for factory service, the amount of increase is usually offset by the transportation charge you would pay if you elected to return your kit to the Heath Company.

HEATHKIT Service Centers will honor the regular 90 day HEATHKIT Parts Warranty on all kits, whether purchased through a dealer or directly from Heath Company; however, it will be necessary that you verify the purchase date of your kit.

Under the conditions specified in the Warranty, replacement parts are supplied without charge; however, if the Service Center assists you in locating a defective part (or parts) in your kit, or installs a replacement part for you, you may be charged for this service.

HEATHKIT equipment purchased locally and returned to Heath Company for service must be accompanied by your copy of the dated sales receipt from your authorized HEATHKIT dealer in order to be eligible for parts replacement under the terms of the Warranty.

THIS SERVICE POLICY APPLIES ONLY TO COMPLETED EQUIPMENT CONSTRUCTED IN ACCORDANCE WITH THE INSTRUCTIONS AS STATED IN THE MANUAL. Equipment that has been modified in design will not be accepted for repair. If there is evidence of acid core solder or paste fluxes, the equipment will be returned NOT repaired.

For information regarding modification of HEATHKIT equipment for special applications, it is suggested that you refer to any one or more of the many publications that are available on all phases of electronics. They can be obtained at or through your local library, as well as at most electronic equipment stores. Although the Heath Company sincerely welcomes all comments and suggestions, it would be impossible to design, test, evaluate and assume responsibility for proposed circuit changes for special purposes. Therefore, such modifications must be made at the discretion of the kit builder, using information available from sources other than the Heath Company.

REPLACEMENTS

Material supplied with HEATHKIT products has been carefully selected to meet design requirements and ordinarily will fulfill its function without difficulty. Occasionally, improper operation can be traced to a faulty component. Should inspection reveal the necessity for replacement, write to the Heath Company and supply all of the following information.

A. Thoroughly identify the part in question by using the part number and description found in the manual Parts List.

B. Identify the type and model number of kit in which it is used.

C. Mention date of purchase.

D. Describe the nature of defect or reason for requesting replacement.

The Heath Company will promptly supply the necessary replacement. PLEASE DO NOT RETURN THE ORIGINAL COMPONENT UNTIL SPECIFICALLY REQUESTED TO DO SO. Do not dismantle the component in question as this will void the guarantee. This replacement policy does not cover the free replacement of parts that may have been broken or damaged through carelessness on the part of the kit builder.

SHIPPING INSTRUCTIONS

In the event that your instrument must be returned for service, these instructions should be carefully followed.

WARNING: Before returning the Transceiver for service, install all tubes. If used, the crystal calibrator must be removed and wrapped separately. Mount the chassis in the cabinet using all screws.

Wrap the equipment in heavy paper, exercising care to prevent damage. Place the wrapped equipment in a stout carton of such size that at least three inches of shredded paper, excelsior, or other resilient packing material can be placed between all sides of the wrapped equipment and the carton. Close and seal the carton with gummed paper tape, or alternately, tie securely with stout cord. Clearly print the address on the carton as follows:

To: HEATH COMPANY
Benton Harbor, Michigan

ATTACH A LETTER TO THE OUTSIDE OF THE CARTON BEARING YOUR NAME, COMPLETE ADDRESS, DATE OF PURCHASE, AND A BRIEF DESCRIPTION OF THE DIFFICULTY ENCOUNTERED. Also, include your name and return address on the outside of the carton. Preferably affix one or more "Fragile" or "Handle With Care" labels to the carton, or otherwise so mark with a crayon of bright color. Ship by insured parcel post or prepaid express; note that a carrier cannot be held responsible for damage in transit if, in HIS OPINION, the article is inadequately packed for shipment.

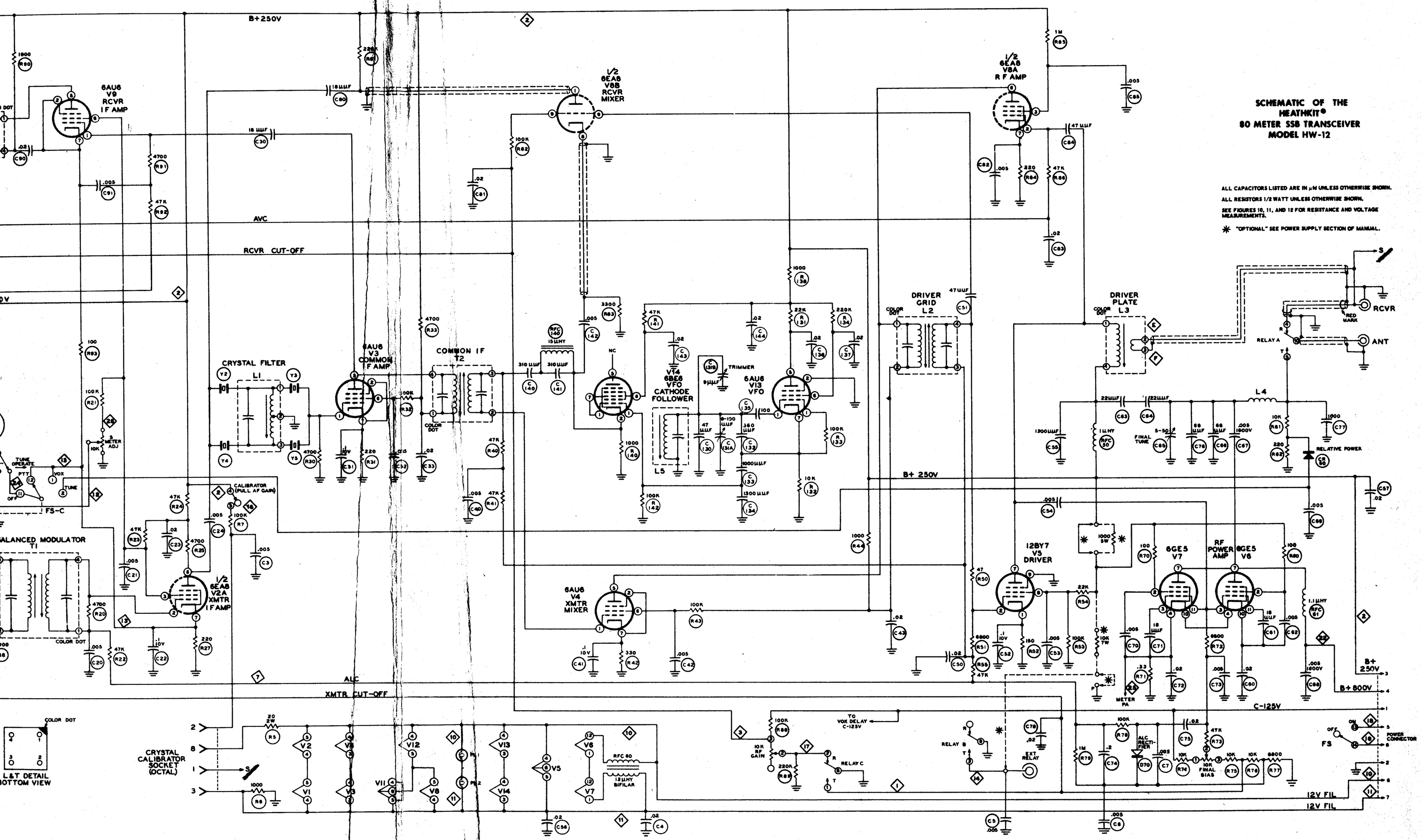
SCHEMATIC OF THE
HEATHKIT®
80 METER SSB TRANSCEIVER
MODEL HW-12
ALL CAPACITORS LISTED ARE IN μμf UNLESS OTHERWISE SHOWN.
ALL RESISTORS 1/2 WATT UNLESS OTHERWISE SHOWN.
SEE FIGURES 10, 11, AND 12 FOR RESISTANCE AND VOLTAGE MEASUREMENTS.
✱ "OPTIONAL." SEE POWER SUPPLY SECTION OF MANUAL.
B+250V
AVC
RCVR CUT-OFF
ALC
XMTR CUT-OFF
6AU6 V9 RCVR I F AMP
1/2 6EA8 V8B RCVR MIXER
1/2 6EA8 V8A R F AMP
6AU6 V3 COMMON I F AMP
COMMON I F T2
CRYSTAL FILTER L1
V14 6BE6 VFO CATHODE FOLLOWER
6AU6 V13 VFO
L5
DRIVER GRID L2
DRIVER PLATE L3
L4
RCVR
ANT
RELAY A
RELATIVE POWER
B+ 250V
12BY7 V5 DRIVER
6GE5 V7
RF POWER AMP 6GE5 V6
B+800V
C-125V
12V FIL
POWER CONNECTOR
FS
TRIMMER
COLOR DOT
RED MARK
3 METER ADJ
TUNE OPERATE
PTT
VOX
TUNE
FS-C
BALANCED MODULATOR T1
CALIBRATOR (PULL AF GAIN)
1/2 6EA8 V2A XMTR I F AMP
6AU6 V4 XMTR MIXER
CRYSTAL CALIBRATOR SOCKET (OCTAL)
L&T DETAIL BOTTOM VIEW
RFC 80
12 μHY BIFILAR
10K RF GAIN
TO VOX DELAY C-125V
RELAY B
RELAY C
EXT RELAY
ALC RECTIFIER
10K FINAL BIAS
METER PA
FINAL TUNE
RFC 30
RFC 61
RFC 140
15 μHY
1.1 μHY

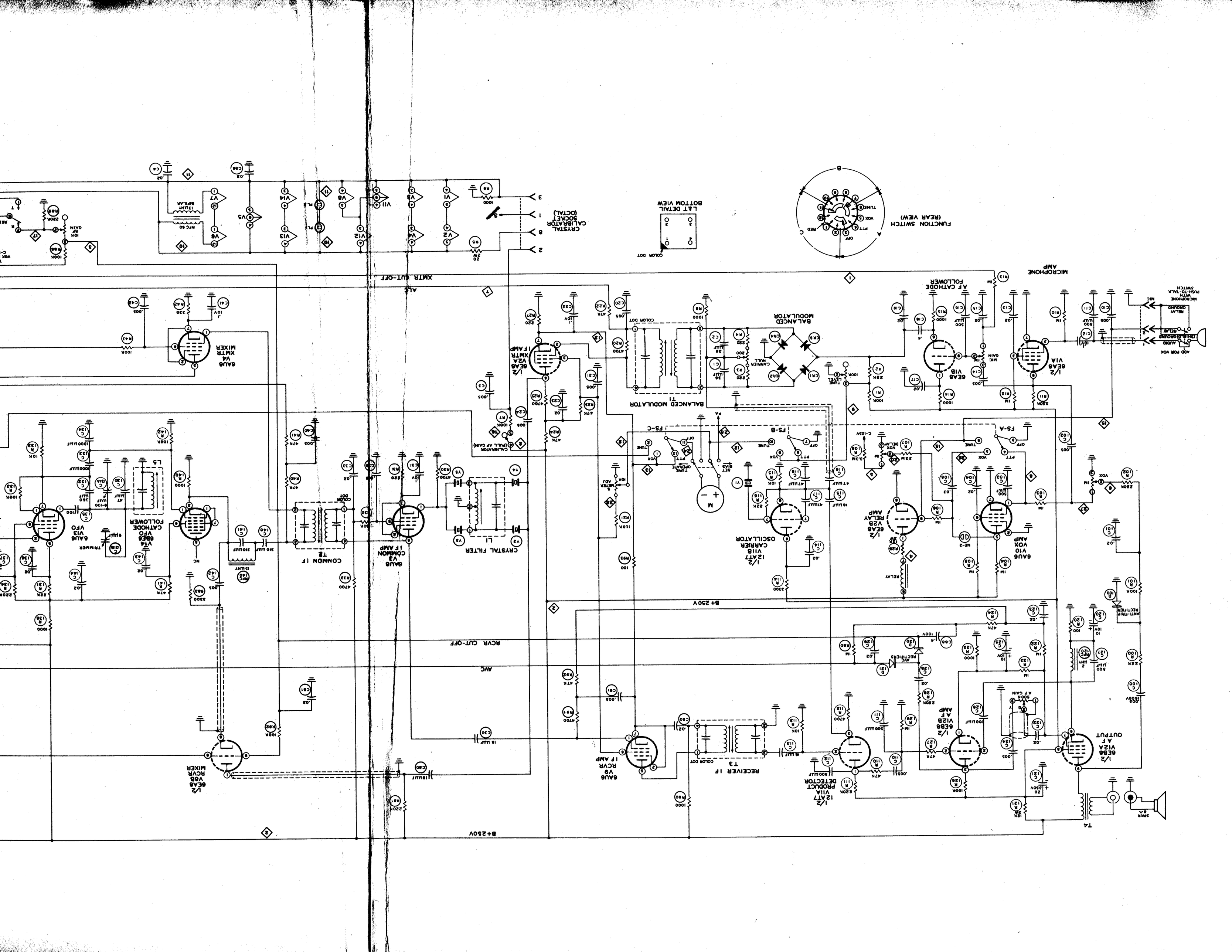
FUNCTION SWITCH (REAR VIEW)
LAT DETAIL BOTTOM VIEW
CRYSTAL CALIBRATOR SOCKET (OCTAL)
MICROPHONE AMP
AF CATHODE FOLLOWER
6EA8 V1B
1/2 6EA8 V1A
BALANCED MODULATOR
BALANCED MODULATOR T1
1/2 6EA8 V2A XMTR IF AMP
6AU6 V4 XMTR MIXER
XMTR CUT-OFF
ALC
1/2 6EA8 V2B CARRIER OSCILLATOR
1/2 6EA8 V2B RELAY AMP
6AU6 V10 VOX AMP
FS-A
FS-B
FS-C
CRYSTAL FILTER L1
COMMON IF T2
6AU6 V3 COMMON IF AMP
6AU6 V13 VFO
V14 6BE6 CATHODE FOLLOWER
L5
1/2 6EB8 V2A AF OUTPUT
1/2 6EB8 V2B AF AMP
RECEIVER IF T3
6AU6 V9 RCVR IF AMP
1/2 12AT7 V11A PRODUCT DETECTOR
1/2 6EA8 V8B RCVR MIXER
RCVR CUT-OFF
AVC
B+250V
T4
SPKR 8Ω

BLOCK DIAGRAM

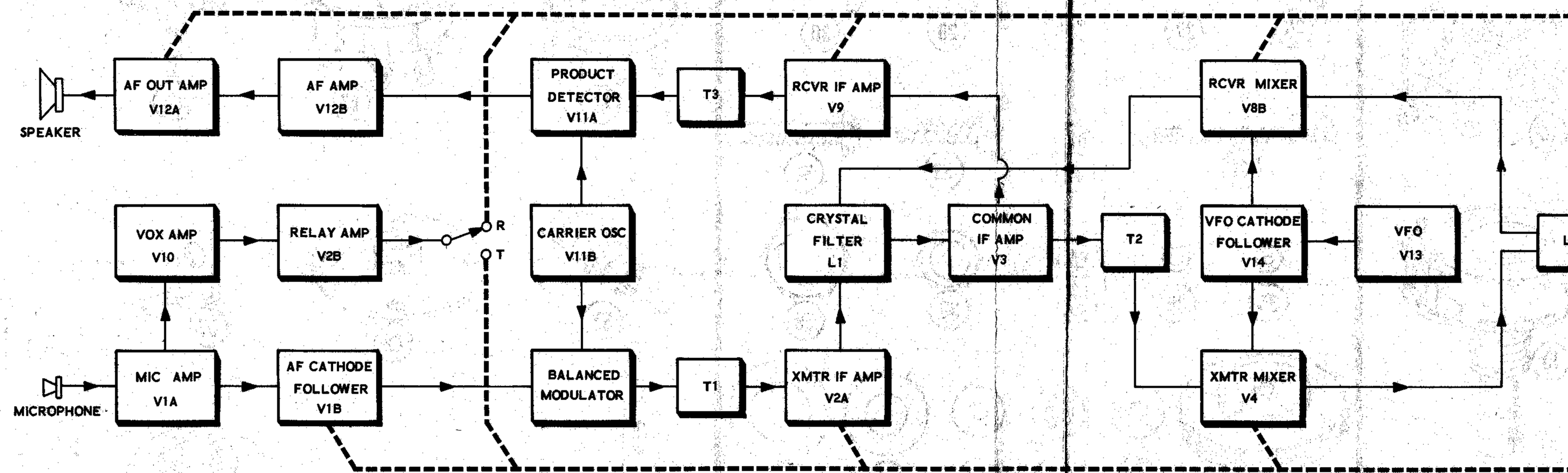

SPECIFICATIONS

RECEIVER SECTION

Frequency Coverage	3.8 to 4 megacycles.
Receiving Mode	Lower sideband.
Sensitivity	1 microvolt of input signal will provide at least a 15 db signal plus noise to noise ratio.
Selectivity	2.7 kilocycles at 6 db. 6 kilocycles at 50 db.
Intermediate Frequency (IF)	2.305 megacycles.
Image Rejection	100 db.
IF Rejection	50 db.
Antenna Input Impedance	50 Ω, unbalanced.
Receiver Audio Response	400 to 3000 cps.
Receiver Audio Power Output	1 watt.
External Speaker Impedance	8 Ω impedance.

TRANSMITTER SECTION

Frequency Coverage	3.8 to 4 megacycles.
Transmitting Mode	Lower sideband.
Frequency Stability	Drift less than 200 cps per hour after warmup.
RF Power Input	200 watts P.E.P.
Output Impedance	50 Ω, unbalanced.
Transmitter Audio Response	400 to 3100 cps.
Microphone	High impedance crystal, ceramic, or dynamic (10 millivolts minimum output).
Unwanted Sideband Suppression	45 db minimum below peak output with 1000 cps modulation.
Carrier Suppression	45 db minimum below peak output.