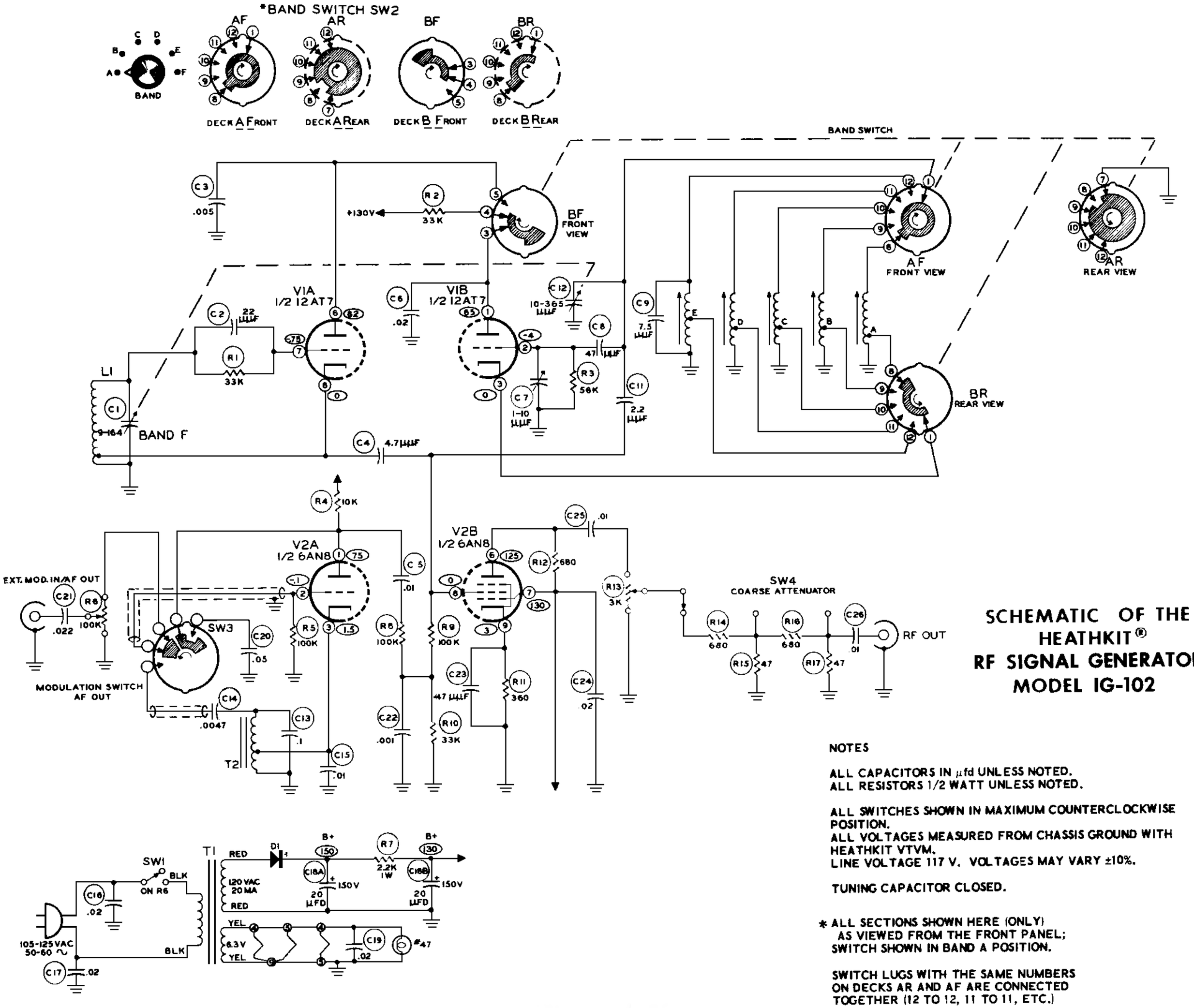

SCHEMATIC OF THE HEATHKIT® RF SIGNAL GENERATOR MODEL IG-102

NOTES

ALL CAPACITORS IN μfd UNLESS NOTED.
ALL RESISTORS 1/2 WATT UNLESS NOTED.

ALL SWITCHES SHOWN IN MAXIMUM COUNTERCLOCKWISE POSITION.
ALL VOLTAGES MEASURED FROM CHASSIS GROUND WITH HEATHKIT VTVM.
LINE VOLTAGE 117 V. VOLTAGES MAY VARY ±10%.

TUNING CAPACITOR CLOSED.

* ALL SECTIONS SHOWN HERE (ONLY) AS VIEWED FROM THE FRONT PANEL; SWITCH SHOWN IN BAND A POSITION.

SWITCH LUGS WITH THE SAME NUMBERS ON DECKS AR AND AF ARE CONNECTED TOGETHER (12 TO 12, 11 TO 11, ETC.)